Maytag LAT9606ABE 02 - CABINET

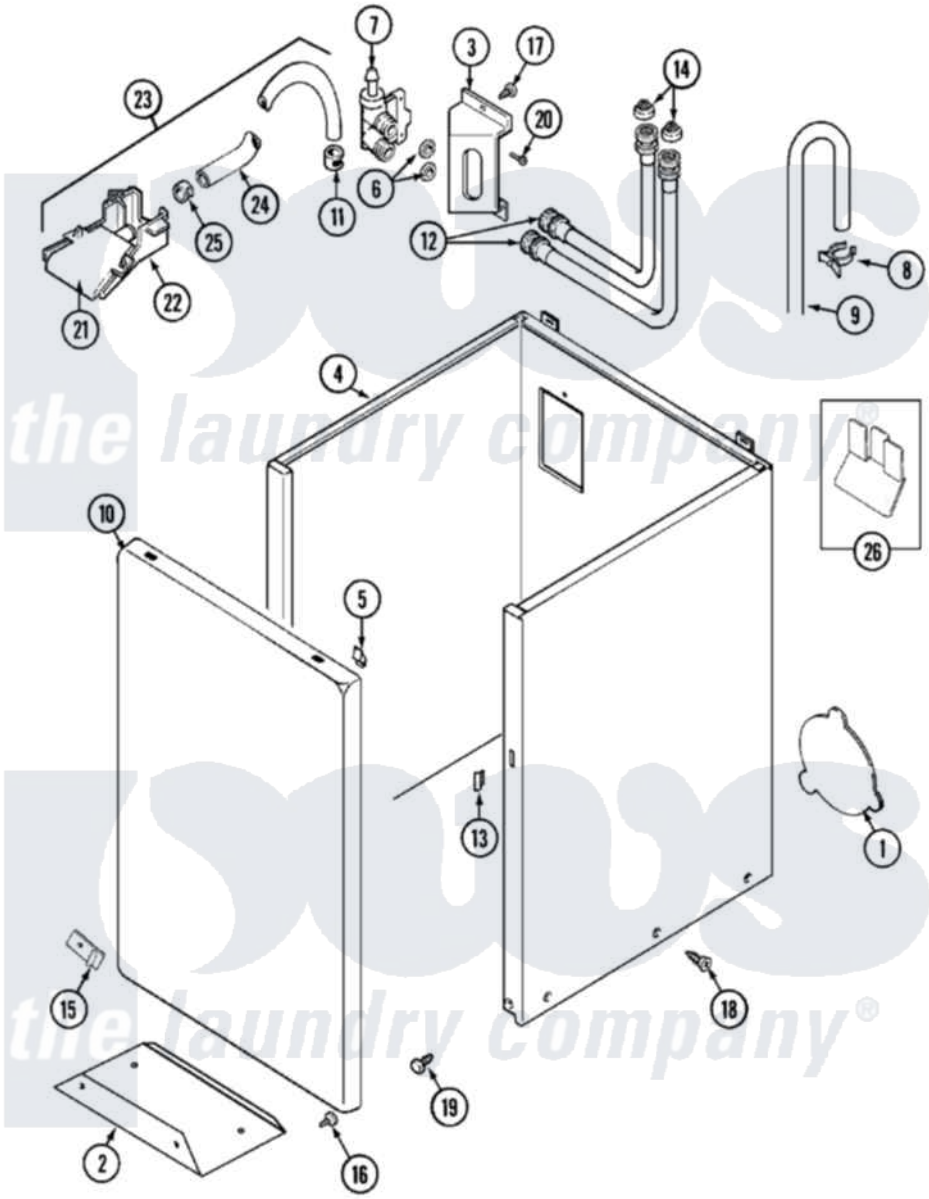

Maytag Residential Maytag LAT9606ABE Washer Parts Parts Diagram 02 - CABINET
Click on the part number to view part

Item	Original Part Number	Replaced By	Status	Part Description
1	211878		Not Available	PLATE, ACCESS
"	211294	90767		Screw, 8A X 3/8 HeX Washer Head Tapping
"	22001683	22002924		Plate, Access
2	213846			Guard, Belt
3	22002361			Bracket, Water Valve
4	22002379	22004425		Cabinet White Aspack
5	22001650			Fastener, Spring
6	Y013783			Washer, Inlet Hose
7	214337	96160		Screen
8	22001815	22002765		Clip, Hose
9	22001816			Hose, Drain
10	22002366		Not Available	PANEL, FRONT (WHT)
11	216169	596669		Clamp, Manifold
12	202860			Inlet Hose Assembly
13	214376	22002331		Spacer, Front Panel
14	200961	12001413		Strainer And Washer Kit

15	12001341		Screw And Fastener Kit
"	22001995		Screw Note: Screw, Tumbler Front And Shroud
"	22002376		Clip
"	22002377		Clip, Retainer
"	22002378	27001200	Screw
16	211294	90767	Screw, 8A X 3/8 HeX Washer Head Tapping
17	22002372		Screw
18	213007		Xfor Cabinet See Cabinet, Back
19	213122	27001200	Screw
"	213121	3400111	Screw, 12-14 X 5/8
20	Y313561		Screw----NA
21	22001187		Injector
22	22001186		Injector
23	22001304		Water Injector Assembly
24	22001190		Hose, Injector
25	216169	596669	Clamp, Manifold
26	22001972		Clip, Cabinet

the laundry company®
the laundry company®