Maytag LDE8624ACL 04 - DUCTING

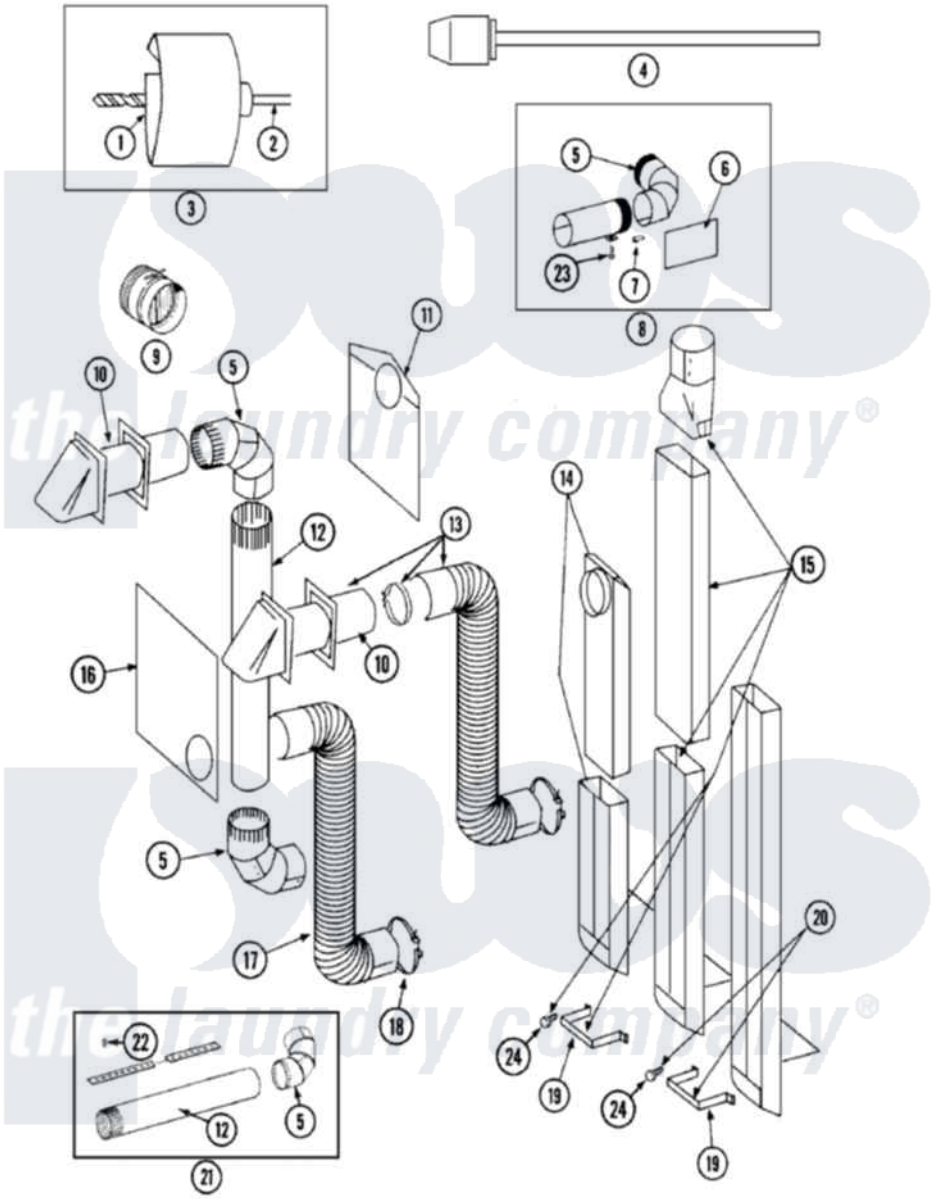

Maytag Residential Maytag LDE8624ACL Dryer Parts Parts Diagram 04 - DUCTING
Click on the part number to view part

Item	Original Part Number	Replaced By	Status	Part Description
1	038179		Not Available	BLADE, SAW
2	038180		Not Available	REPLACEMENT DRILL
3	038766		Not Available	HOLE SAW W/DRILL BIT
4	038767			Extension Chuck, Drill
5	Y059131			Elbow, Venting
6	312302			Insulation, Exhaust Duct Kit
7	213323			Fastener, Exhaust Duct Kit
8	Y304652			Exhaust Duct Kit
9	059146		Not Available	DAMPER, BACK DRAFT
10	Y059129	4396007RW		Vent Hood
11	311353		Not Available	BAG, LINT (DACRON)
12	Y059130			Pipe, Venting
13	Y059143			Flexible Vent Kit
14	Y059135			Vent Duct Assembly
15	059144		Not Available	RECTANGULAR VENT KIT
16	Y059134			PLATE, ALUM. WINDOW (15``X20``)

17	Y304353	4396010RP		6ft Scvent
18	Y304630			Clamp, Flexible Duct
19	313272			Bracket, Exhaust Deflector
20	303736		Not Available	EXHAUST DEFLECTOR KIT
21	306399		Not Available	EXHAUST DEFLECTOR KIT
22	Y251119	3177991		Screw
23	211294	90767		Screw, 8A X 3/8 HeX Washer Head Tapping
24	211294	90767		Screw, 8A X 3/8 HeX Washer Head Tapping

the laundry company®
the laundry company®
the laundry company®