Maytag LDE8704ACM 02 - CABINET-REAR (LDE8704ACM & LDG8704AAM)

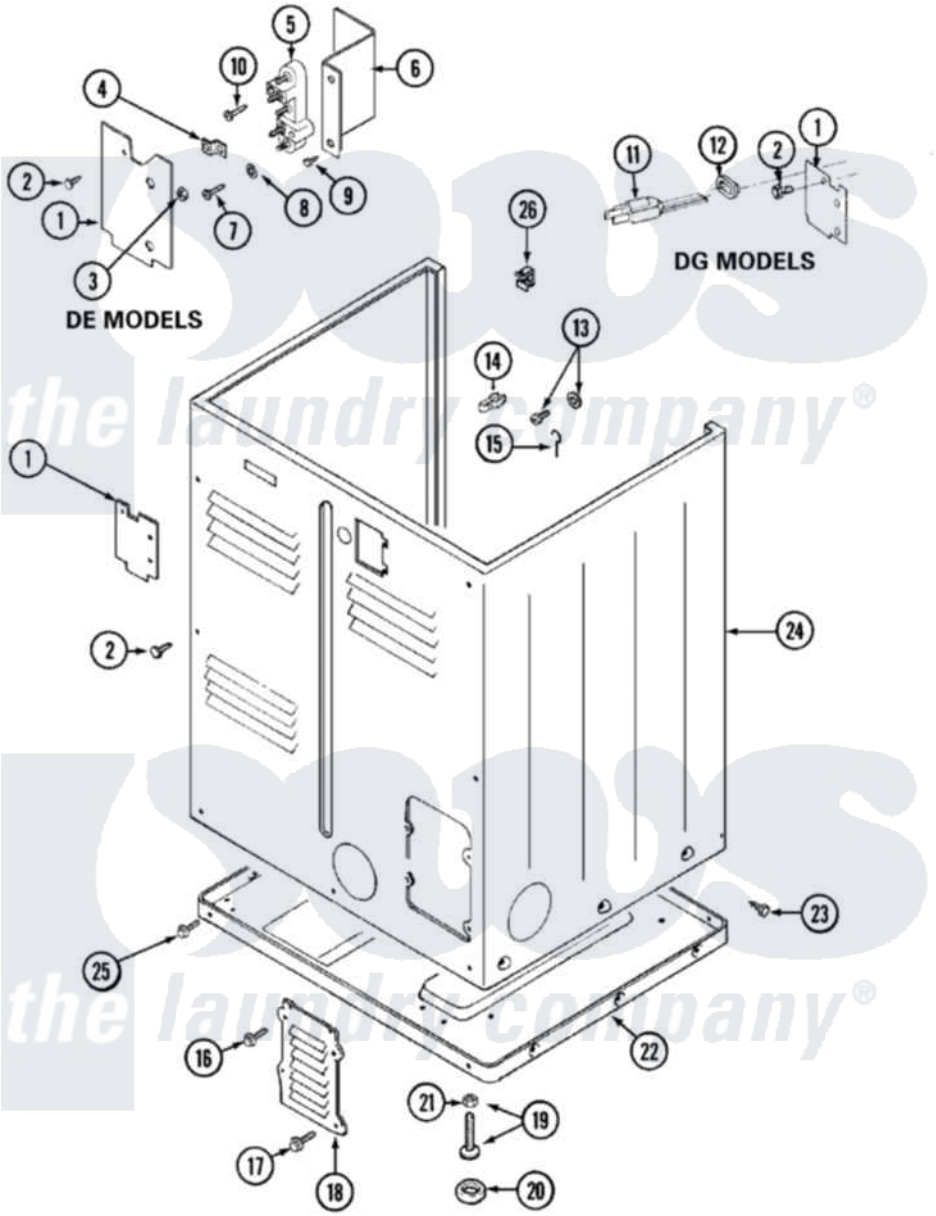

Maytag Residential Maytag LDE8704ACM Dryer Parts Parts Diagram 02 - CABINET-REAR (LDE8704ACM & LDG8704AAM)
Click on the part number to view part

Item	Original Part Number	Replaced By	Status	Part Description
1	Y312905		Not Available	COVER, TERMINAL
2	Y313561			Screw----NA
3	311484	112432		Nut
4	Y312184			Strap, Grounding
5	400008			Block, Terminal
6	Y312904			Bracket, Terminal Block
7	Y312209	W10001200		Screw
8	Y311270			Washer, Terminal Block
9	Y310632	1163839		Screw
10	33001245			Screw----NA
13	303846	22003781		Screw, Ground Strap
14	301548			Clamp, Ground Wire
15	204807			Ground Wire, Supp. Plte To Top Cover
16	Y313559			Screw

17	211294	90767		Screw, 8A X 3/8 HeX Washer Head Tapping
18	Y312951		Not Available	ACCESS COVER, BACK
19	Y305086			Adjustable Leg And Nut
20	Y314137			Foot, Rubber
21	Y052740	62739		Nut, Lock
22	Y303361		Not Available	BASE ASSY. (UPPER & LOWER)
23	213007			Xfor Cabinet See Cabinet, Back
24	33001160		Not Available	CABINET (ALM)
25	Y310632	1163839		Screw
"	Y313561			Screw----NA

the laundry company®
the laundry company®
the laundry company®