Maytag LDG4000AAL 04 - DOOR

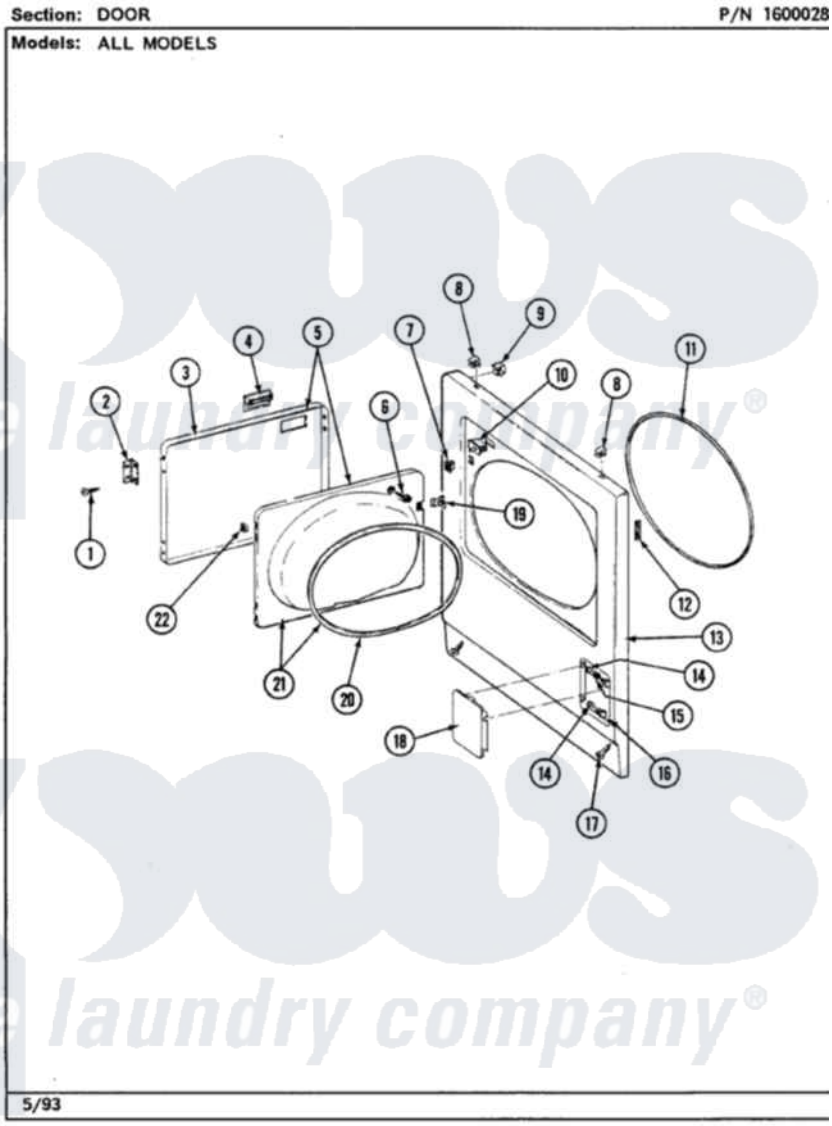

Maytag Residential Maytag LDG4000AAL Dryer Parts Parts Diagram 04 - DOOR
Click on the part number to view part

Item	Original Part Number	Replaced By	Status	Part Description
1	Y314062			Screw, Door Hinge And Panel
2	307099	33001230		Hinge, Door
3	314966L		Not Available	DOOR PANEL ALMOND
4	314972			Handle Door ALM
5	307111L	308061L		Door Assembly----NA
6	312960	489355		Screw, 8 X 1/2
7	306436			Door Latch Kit--W
8	212982	22001650		Fastener, Spring
9	Y310376			Clip, Door Switch Harness
10	Y305753	W10169313		Switch-Dor
11	314937			Seal, Front Panel
12	Y313907			Fastener, Twin
13	307998L			Front Panel----NA
"	308000L			Front Panel Assembly
14	312301		Not Available	BUSHING FOR ACCESS STUD
				Sleeve, Access Panel Stud

15	312369			Sleeve, Access Panel Stud Part Not Used
16	212949	22001866		Screw, Relay
17	204439			Screw And Fstner Assembly
18	302542L		Not Available	PART NOT USED. (DG ONLY)
19	314936	33001305		Strike, Door
20	314935	33001192		Seal, Door
21	307098		Not Available	DOOR, INNER (W/SEAL)
22	315441		Not Available	LABEL, INSTRUCTION CANADA
"	Y313910			Clip, Door Liner To Outer Panel
"	314941		Not Available	LABEL, INSTRUCTION

the laundry company®
the laundry company®
the laundry company®