Maytag LDG7304AAM 03 - CONTROL PANEL (LDG7304AAM & LDG7304ABM)

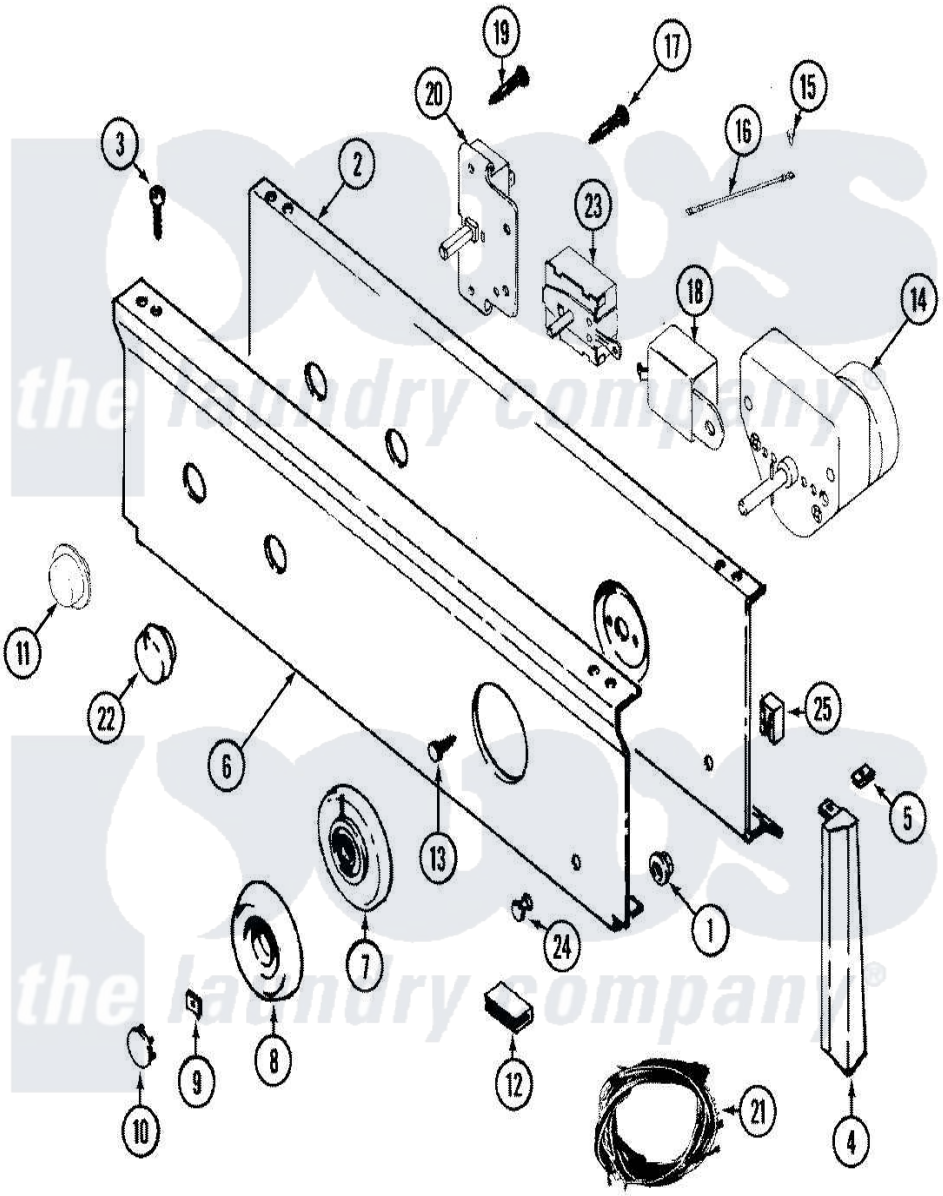

Maytag Residential Maytag LDG7304AAM Dryer Parts Parts Diagram 03 - CONTROL PANEL (LDG7304AAM & LDG7304ABM)
Click on the part number to view part

Item	Original Part Number	Replaced By	Status	Part Description
1	214872			Palnut, End Cap Note: Nut, Lamp Holder
2	33001237		Not Available	PLATE, SUPPORT
3	210932			Screw, No.8 X 9/16 Ctsk Note: Screw, Inlet Duct
4	22001566	22001293		End Cap, Control Panel
"	22001293			End Cap, Control Panel
"	22001292	22001567		Cap, End
"	22001567			Cap, End
5	214894			Fastener, End Cap
6	33001472		Not Available	PANEL, CONTROL (ALM)
7	33001372		Not Available	SKIRT, TIMER DIAL (ALM)
8	33001282	33002325		Knob Assembly
9	312273			Nut, Control Knob
10	216424		Not Available	CAP, KNOB (ALM)

11	33001371			Button, Push-To-Start
12	214897			Pad, Control Panel
13	315317	488234		Screw 8-32 X 1/4
14	Y308254			Timer
15	210186	3370225		Screw
16	204807			Ground Wire, Supp. Plte To Top Cover
17	315317	488234		Screw 8-32 X 1/4
18	Y308205	33001623		Buzzer, Non-Adjustable
19	315317	488234		Screw 8-32 X 1/4
20	33001232		Not Available	SWITCH, PUSH TO START
21	33001547			Harness, Wire
"	33001352			Wire Harness, Main
22	22001269		Not Available	KNOB ASSY. (ALM)
23	33001228		Not Available	SWITCH, TEMP. (3 POSITIONS)
24	22001215	7730P011-60		Lens, Indicator Light
25	33001224			Light, Indicator

the laundry company®

the laundry company®