Maytag LDG7304ABE 01 - CABINET-FRONT

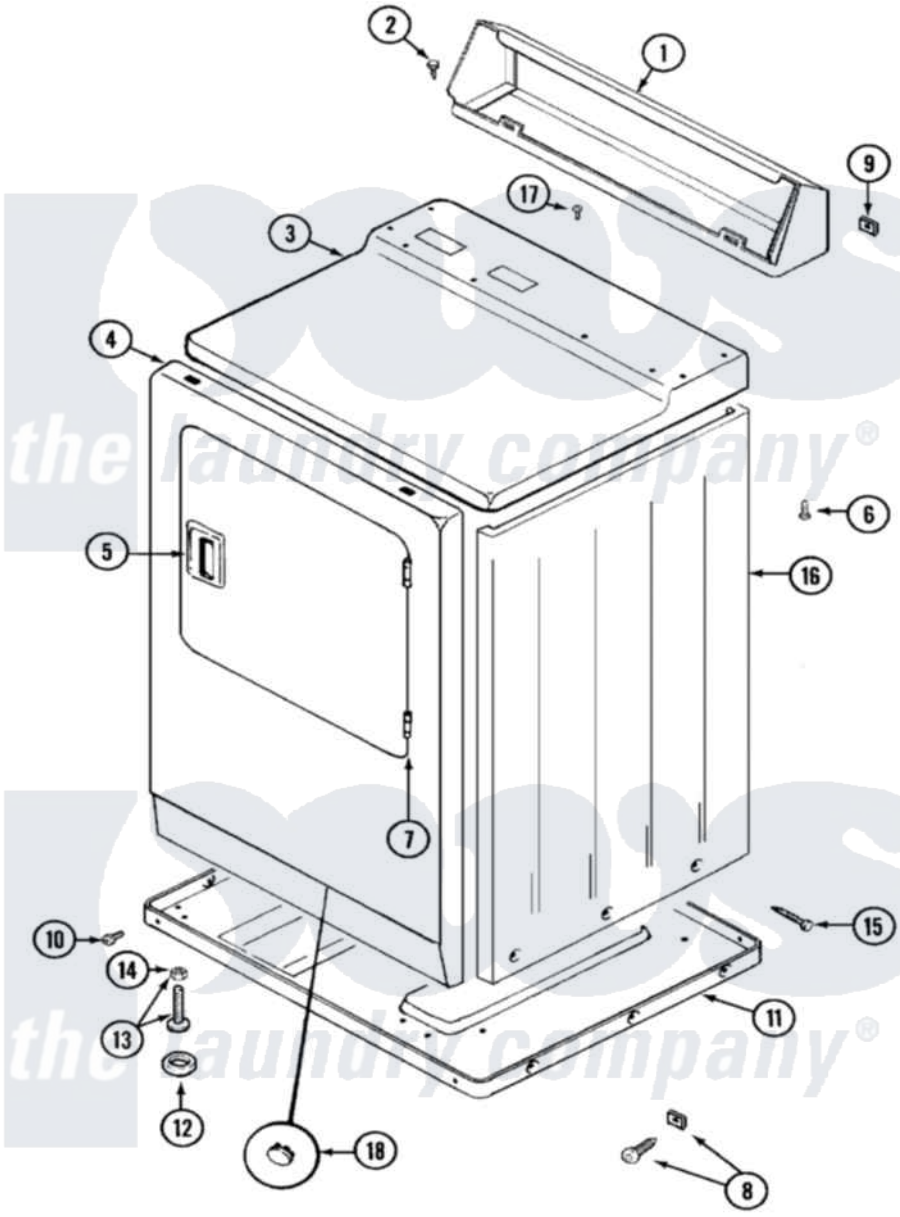

Maytag Residential Maytag LDG7304ABE Dryer Parts Parts Diagram 01 - CABINET-FRONT
Click on the part number to view part

Item	Original Part Number	Replaced By	Status	Part Description
1	Y305193			Console
2	216423	3370225		Screw
3	33001165			Top Cover Assembly
4	33001242			Panel, Front
5	33001241			Handle, Door
6	214354			Screw, Top Cover To Cabnt.
7	33001230			Hinge, Door
8	204439			Screw And Fstner Assembly
9	215075			Fastener, Control Panel To Console
10	Y313561			Screw----NA
"	Y310632	1163839		Screw
11	Y303361		Not Available	BASE ASSY. (UPPER & LOWER)
12	Y314137			Foot, Rubber
13	Y305086			Adjustable Leg And Nut
14	Y052740	62739		Nut, Lock

15	213007		Xfor Cabinet See Cabinet, Back
16	33001159	33001327	Cabinet
17	210186	3370225	Screw
18	33001132	33002342	Plug, Sifht Hole

the laundry company®
the laundry company®
the laundry company®