Maytag LDG7480AAL 08 - TUMBLER

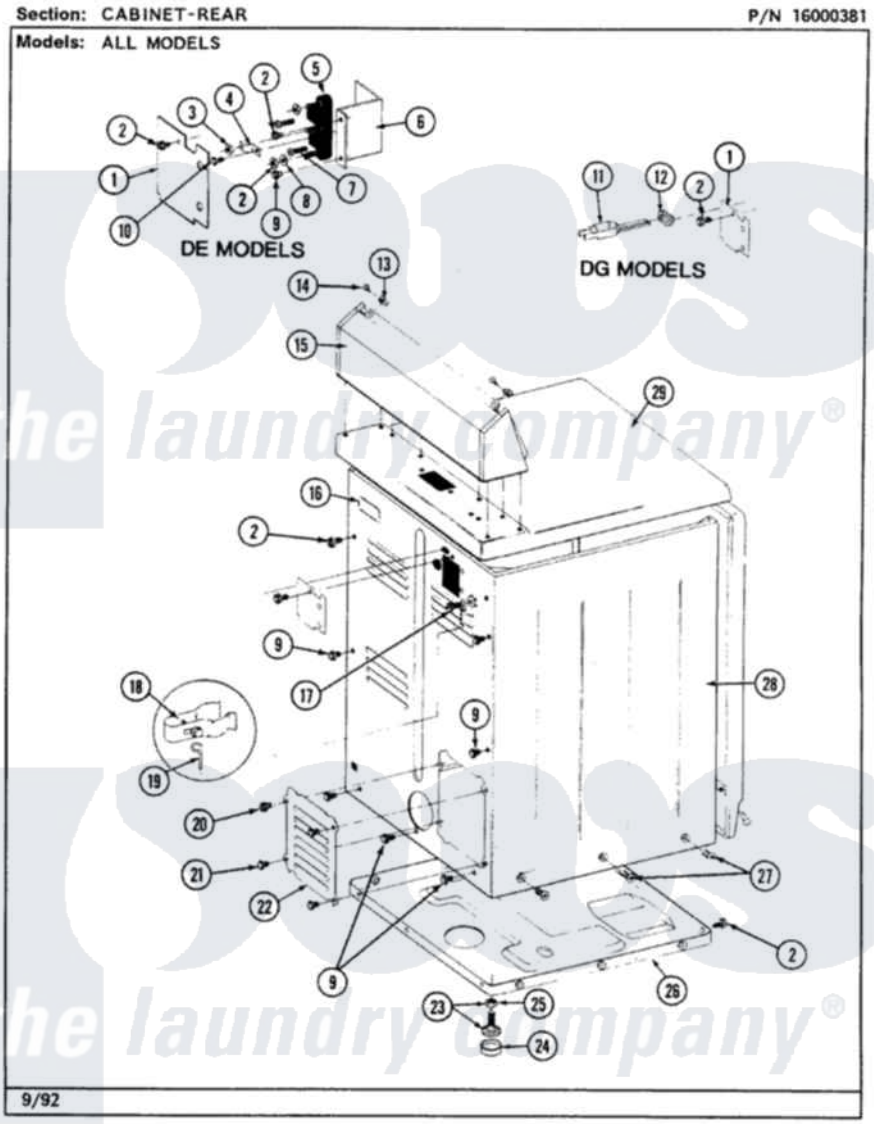

6

Maytag Residential Maytag LDG7480AAL Dryer Parts Parts Diagram 08 - TUMBLER
Click on the part number to view part

Item	Original Part Number	Replaced By	Status	Part Description
1	Y307112	33001016		Outlet Duct Assembly
2	Y307107	33002970		Lint Filte
3	313764		Not Available	SCREW
4	Y313561			Screw----NA
5	307109	33001179		Front, Tumbler
6	Y310376			Clip, Door Switch Harness
7	Y310632	1163839		Screw
8	306508			Tumbler Bearing Kit ----W
9	210720			Rivet, Bearing To Tumbler Frnt
10	314820			Seal, Tumbler
11	314803	33001012		Baffle
12	314158			Washer, Baffle To Tumbler
13	314802		Not Available	TUMBLER W/OUT BAFFLES
"	306663		Not Available	TUMBLER W/BAFFLES
14	Y310759			Screw, Tumbler Baffles
15	Y308544	33001178		Back, Tumbler

"	Y307114	33001178	Back, Tumbler
16	313915	31-3915	Tech Sheet
17	211294	90767	Screw, 8A X 3/8 HeX Washer Head Tapping
18	312538	33001443	Nut, Hex
19	Y313347	312535	Washer, Vault Mounting Brk.
20	Y312948	6-3129480	Shaft- Tumbler
21	Y303373	12001541	Drum Roller/Washer Assembly--W
22	312535		Washer, Vault Mounting Brk.
23	410233	9703438	Ring-Retnr
24	Y312959		Poly "V" Belt For Tumbler
25	314804	33001004	Baffle, Tall
26	Y314110	33002917	Screw, No.10-16

the laundry company®
the laundry company®
the laundry company®