Maytag LDG8604AAL 05 - GAS VALVE

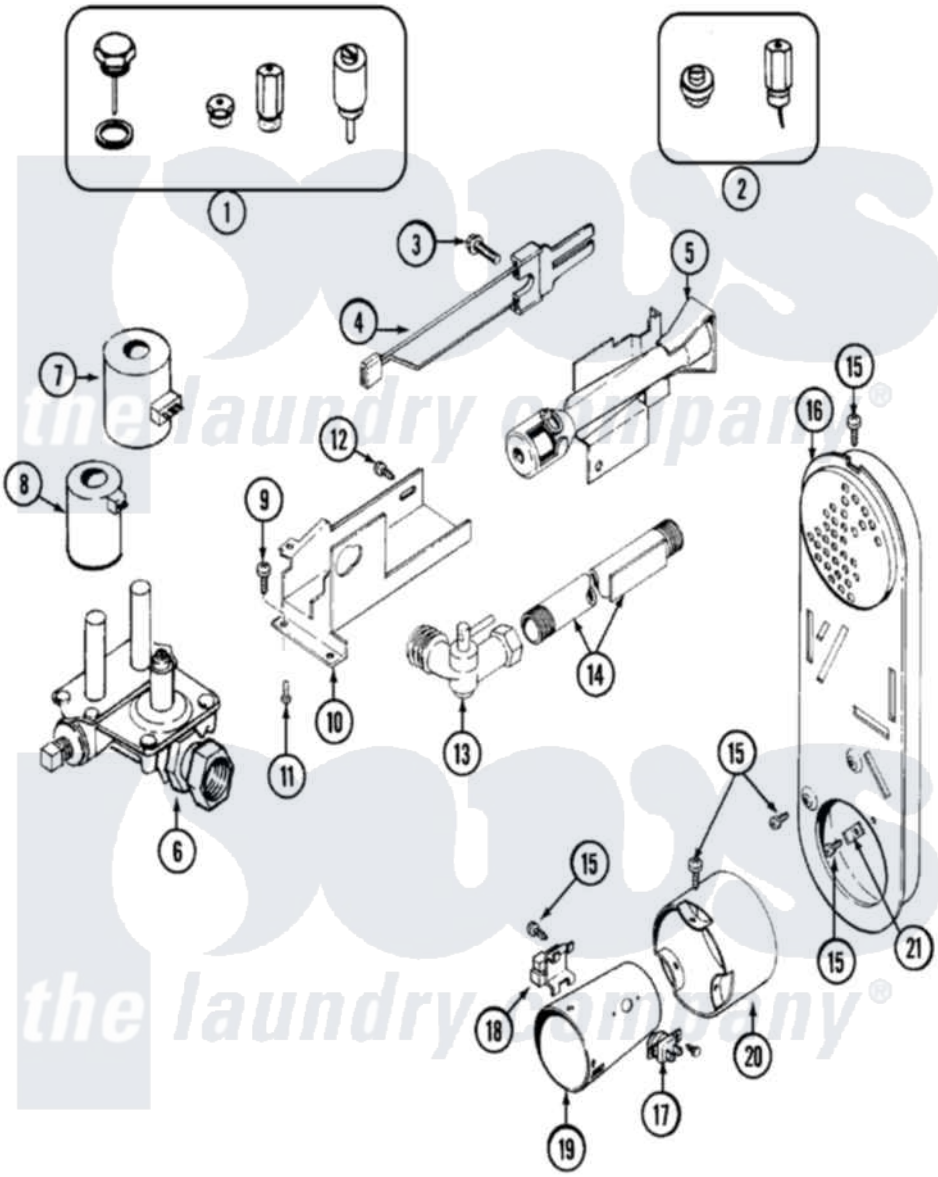

Maytag Residential Maytag LDG8604AAL Dryer Parts Parts Diagram 05 - GAS VALVE
Click on the part number to view part

Item	Original Part Number	Replaced By	Status	Part Description
1	Y306195	MAL9000AXX		LP Gas Con
2	306204	33002924		Gas Conv K
3	304971			Screw Note: Screw, Igniter
4	304970	4391996		Ignitor
5	33001247	33002793		Burner Assembly
6	306176			Valve, Gas
7	306106			Coil, Holding And Booster--W
8	306105	694540		Coil, 60 Hz
9	Y313561			Screw----NA
10	314566			Gas Control Bracket
11	Y313559			Screw
12	314568	Y313559		Screw
"	314082	90767		Screw, 8A X 3/8 HeX Washer Head Tapping
13	Y303349			Angle Shut-Off, Gas Valve
14	Y303383	33001735		Pipe And Bracket Assembly Series 18 Not Needed Use

				Vavle
15	211294	90767		Screw, 8A X 3/8 HeX Washer Head Tapping
16	Y308504		Not Available	INLET DUCT ASSEMBLY
17	303395			Thermostat, Hi-Limit
18	Y303377	338906		Radiant, Sensor
19	Y308548			Combustion Cone Assembly
21	Y312890			Retainer, Heater Chamber

the laundry company®
the laundry company®
the laundry company®