Maytag LDG9801ABL 02 - CABINET-REAR

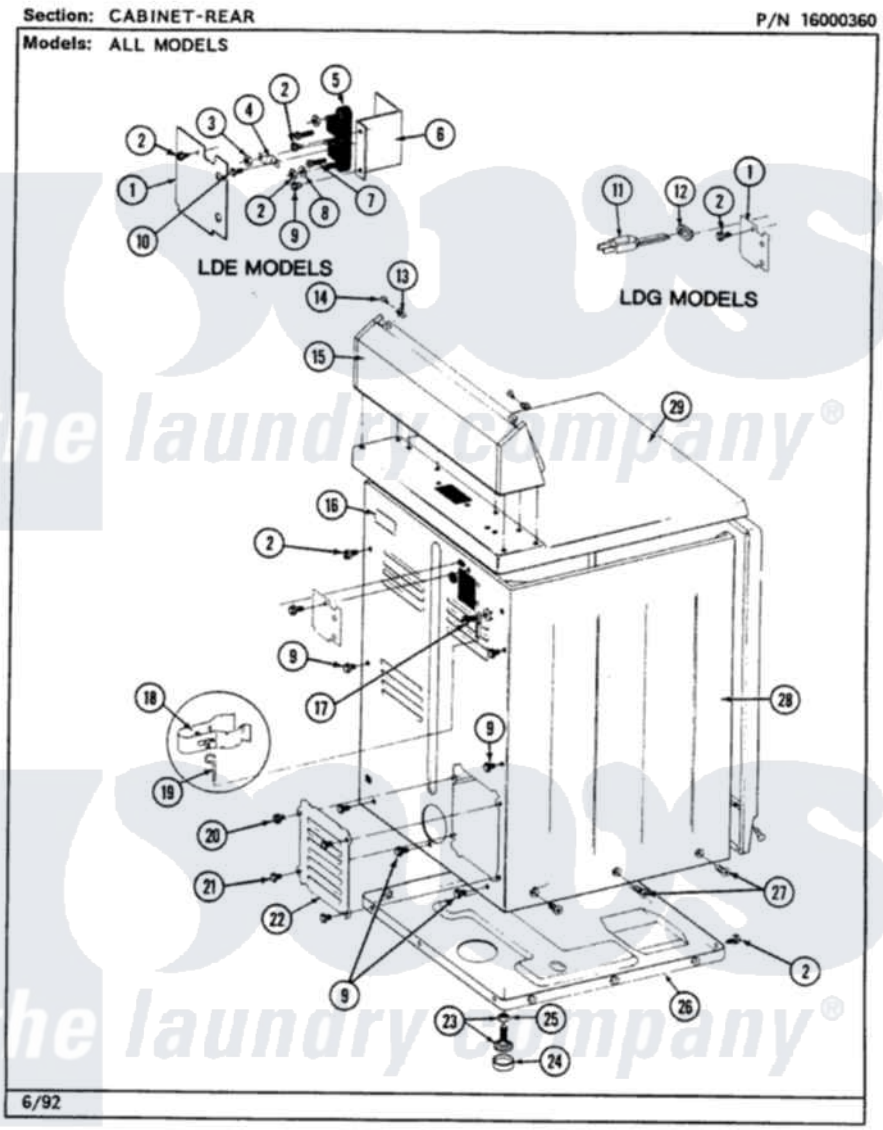

Maytag Residential Maytag LDG9801ABL Dryer Parts Parts Diagram 02 - CABINET-REAR
Click on the part number to view part

Item	Original Part Number	Replaced By	Status	Part Description
1	Y312905		Not Available	COVER, TERMINAL
2	Y313561			Screw----NA
9	Y310632	1163839		Screw
11	302521		Not Available	CORD, POWER PART NOT USED-GAS MODELS ONLY
12	211881			Grommet, Cord Part Not Used-Gas Models Only
13	215075			Fastener, Control Panel To Console
14	210932			Screw, No.8 X 9/16 Ctsk Note: Screw, Inlet Duct
15	305193L			Console
16	214519			LABEL, ELECTRICAL INSTR. PART NOT USED-GAS MODELS ONLY
17	303846	22003781		Screw, Ground Strap
18	301548			Clamp, Ground Wire
19	311155			Ground Wire And Clamp
20	Y313559			Screw

21	211294	90767		Screw, 8A X 3/8 HeX Washer Head Tapping
22	Y312951		Not Available	ACCESS COVER, BACK
23	Y305086			Adjustable Leg And Nut
24	Y314137			Foot, Rubber
25	Y052740	62739		Nut, Lock
26	Y303361		Not Available	BASE ASSY. (UPPER & LOWER)
27	213077		Not Available	CAP FOR TIMER KNOB
28	307124L		Not Available	CABINET ASSY ALMOND
29	307104L			Top Cover Assembly

the laundry company®
the laundry company®
the laundry company®