Maytag LSG9900ABE 01 - ACCESS PANEL & TUB LIGHT

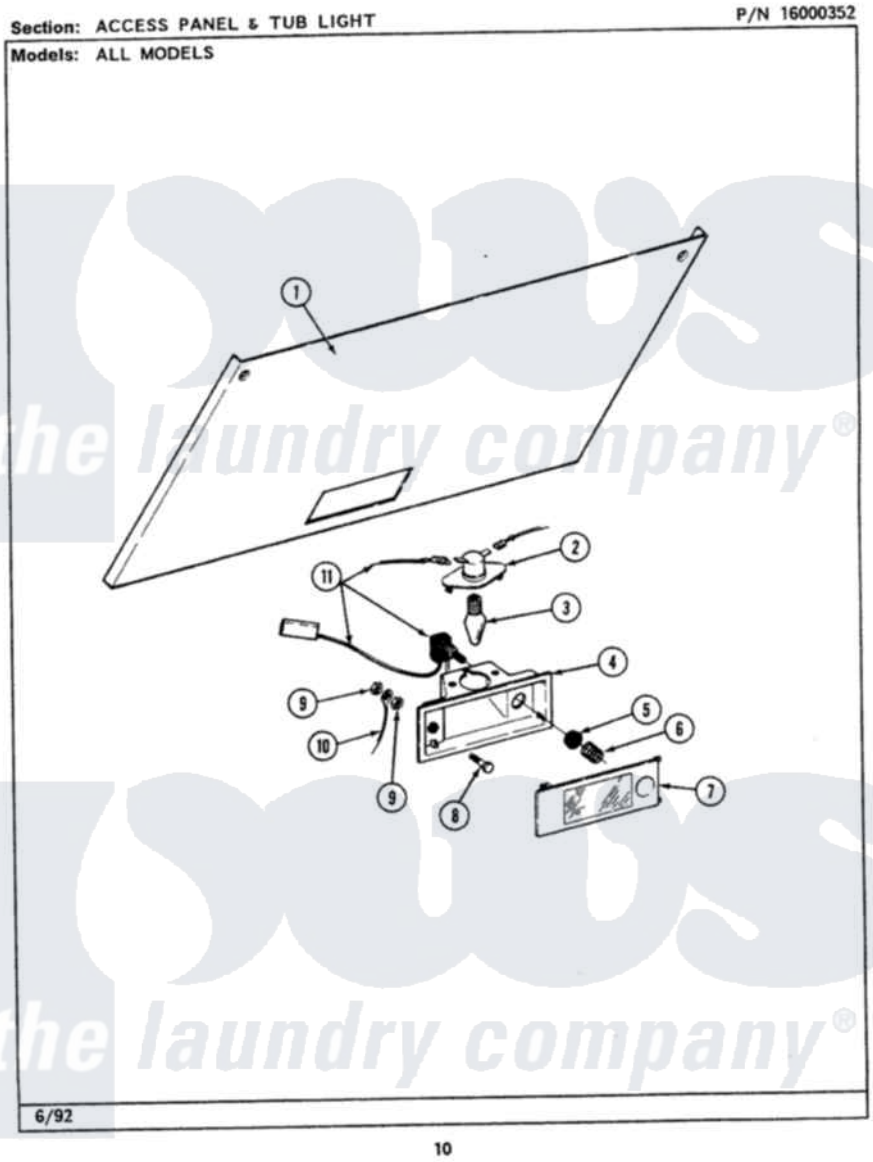

Maytag Residential Maytag LSG9900ABE Stacked Washer and Dryer Parts Parts Diagram 01 - ACCESS PANEL & TUB LIGHT

Click on the part number to view part

Item	Original Part Number	Replaced By	Status	Part Description
1	307844		Not Available	ACCESS PANEL (WHT)
2	315198		Not Available	LAMP HOLDER
3	Y307100	67001316		Bulb, Light
4	315195			Lamp Bracket
5	315197		Not Available	NUT FOR TUB LIGHT SWITCH
6	315196		Not Available	SPRING FOR TUB LIGHT
7	Y307845		Not Available	LENS ASSEMBLY
8	315211	22002354		Screw, Back Bracket
9	912077			Locknut, Reader Harness
10	204807			Ground Wire, Supp. Plte To Top Cover
11	Y307847			Switch And Wire Assembly