Maytag MAH14PDBEW 08 - BASE

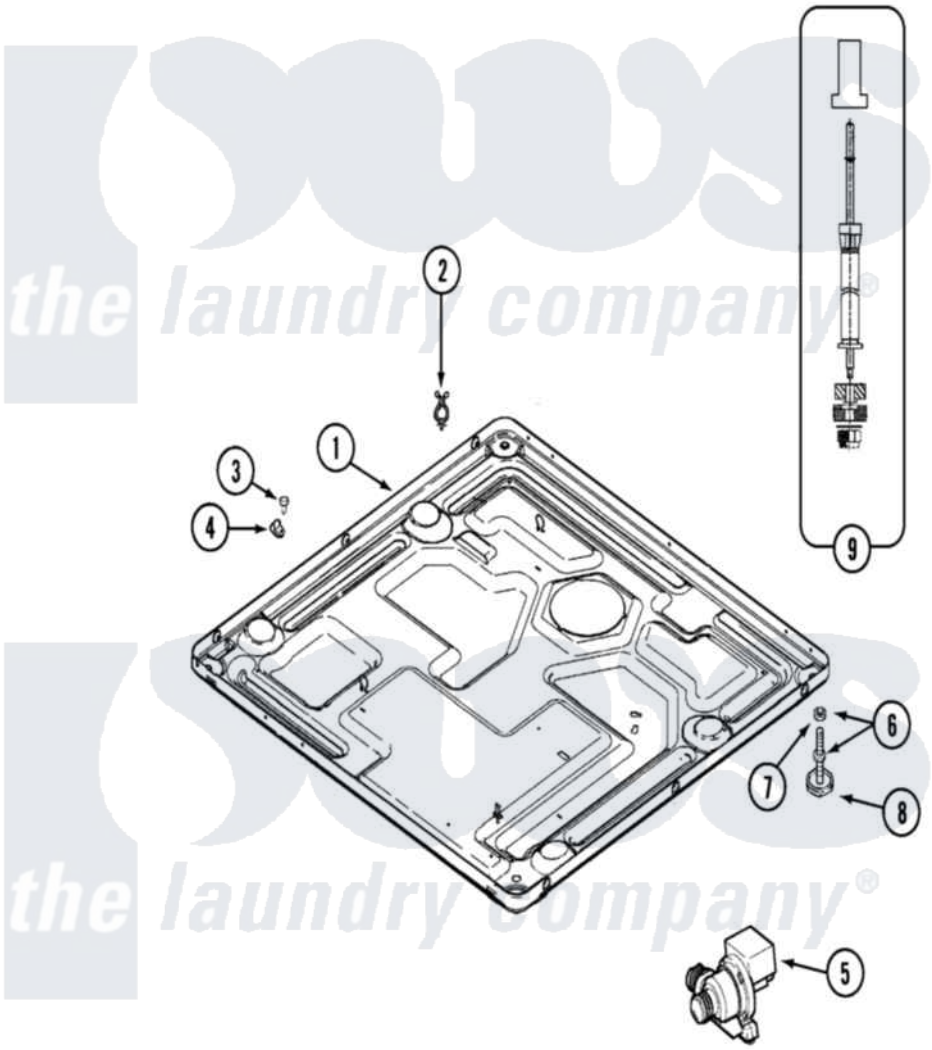

Maytag Residential Maytag MAH14PDBEW Washer Parts Parts Diagram 08 - BASE
Click on the part number to view part

Item	Original Part Number	Replaced By	Status	Part Description
001	22002240	22003435		Base, Assembly
"	22003580			Base, Assembly
"	22003605			Base Weld Assembly
002	315471	22003298		Retainer, Wire
003	212276	W10116760		Screw
004	22002014			Clip, Harness To Support
005	22002809	22003635		Pump, High Torque
006	22003544			Adjustable Leg W/Foot And Nut
007	Y052740	62739		Nut, Lock
008	210684			Foot, Adjustable Leg
009	22001988			Strut Assembly-Rear
010	22002120	12002039		Neptune Motor Conversion Kit
"	22003216			Motor Control Mounting Bracket
011	22002471			Wire Harness, Motor Control
012	212276	W10116760		Screw

013	210720		Rivet, Bearing To Tumbler Frnt
014	22002173	22002014	Clip, Harness To Support
015	22002476	22003778	Transformer
"	22002477		Shield, Transformer
"	22003778		Transformer
016	22003080		Clip, Airdome Hose
"	33002223		Restrainer, Tube

the laundry company®
the laundry company®
the laundry company®