Maytag MAH14PDDWW 01 - CONTROL PANEL

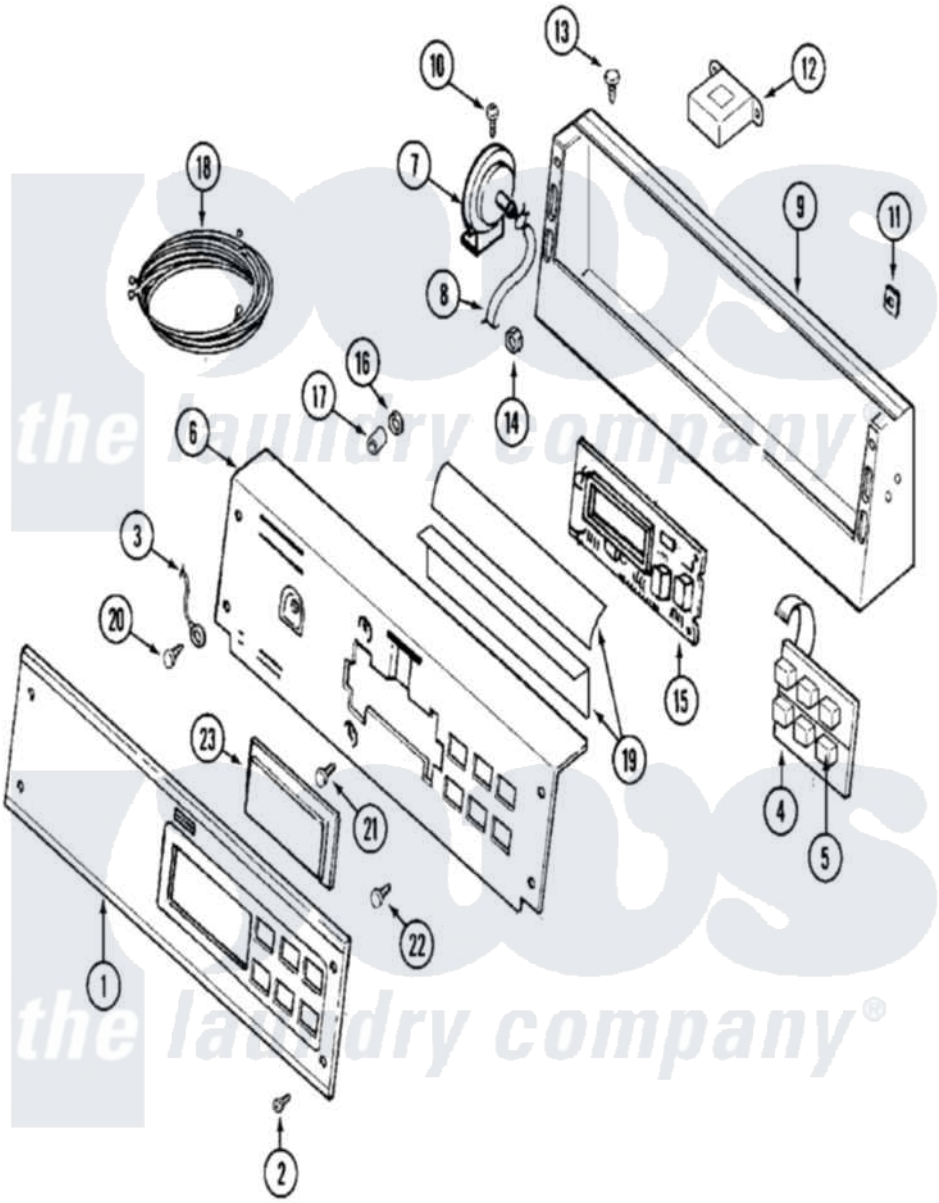

Maytag Residential Maytag MAH14PDDWW Washer Parts Parts Diagram 01 - CONTROL PANEL
Click on the part number to view part

Item	Original Part Number	Replaced By	Status	Part Description
001	22002043	22004349		Facia - Pd/Ps
002	215506			Screw, Control Panel Overlay
003	205810			Wire, Ground
004	206808	W10135389		Push Button And Switch Assembly
"	215527	W10140652		Screw, 6-20 X 1/2
005	215517	W10131113		Push Button
006	22002036			Switch Bracket And Back Brkt-White
007	22002048	22002921		Switch- Pr
008	22002010			Hose, Pressure Switch
"	NLA		Not Available	CLIP, PRESSURE SWITCH HOSE
009	22002329			Console
010	22001996	3370225		Screw
011	215003			Fastener, Panel And Bracket
012	22001960			Transformer

013	211251			Screw, Transformer
014	22001419			Nut, Transformer
015	NLA		Not Available	BOARD, CONTROL
016	912077			Locknut, Reader Harness
017	33001204			Stand-Off, Ccontrol Board
018	NLA		Not Available	HARNESS, WIRE
019	22001511	22002954		Deflector, Water
020	211252			Screw, Ground Wire
021	215526			Screw, Circuit Board
022	215527	W10140652		Screw, 6-20 X 1/2
023	22001962	W10131114		Cover, Display

the laundry company®
the laundry company®
the laundry company®