Maytag MAH14PNAGW 05 - DOOR & FRONT PANEL

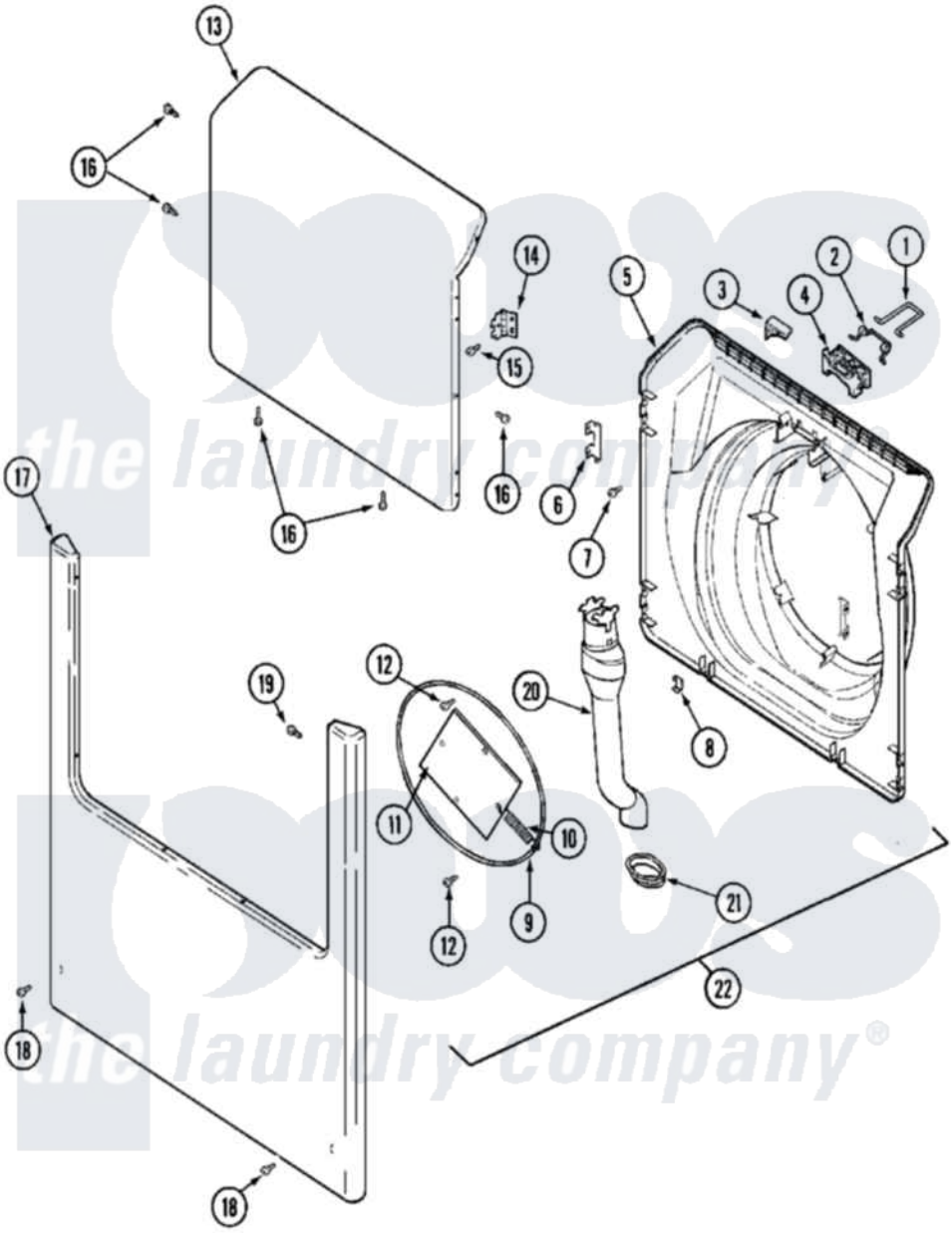

Maytag Residential Maytag MAH14PNAGW Washer Parts Parts Diagram 05 - DOOR & FRONT PANEL
Click on the part number to view part

Item	Original Part Number	Replaced By	Status	Part Description
001	22002002	22003222		Hoop, Lock
002	22002003			Spring, Latch
003	22002355	22003083		Liner, Door Assembly W/Vent
004	22002168			Support, Lock Hoop
005	22002355	22003083		Liner, Door Assembly W/Vent
"	22002539	22003083		Liner, Door Assembly W/Vent
"	22003076	22003083		Liner, Door Assembly W/Vent
006	22002038			Clip, Door
007	22002007			Screw, Wire Frame
008	22002039			Clip, Door
009	22002104			Frame, Wire
"	W10124350		Not Available	NOT REQUIRED PART OR SEE NOTE
010	22002356			Spring, Plate
"	W10124350		Not Available	NOT REQUIRED PART OR SEE NOTE
011	22002094			Frame, Wire

"	W10124350		Not Available	NOT REQUIRED PART OR SEE NOTE
012	22002007			Screw, Wire Frame
"	W10124350		Not Available	NOT REQUIRED PART OR SEE NOTE
013	22001979			Door, Outer
"	22002333			Label, Open Door
014	22002000	22002798		Hinge, Door
015	22002062	98006631		Screw
016	22002063			Screw No.8-18AB Wafer Head
017	22002241	22002836		Panel, Front
018	22001496			Front Panel Fastener And Screw
019	22002012			Screw, Hinge Note: Screw, Hinge Bracket
"	22002243			Screw, Front Panel And Hinge
"	22002244			Clip, Grounding
020	22002990	22003850		Vent Tube Assembly
021	22003075			Grommet, Vent Tube
022	22003083			Liner, Door Assembly W/Vent

the laundry company®
the laundry company®