Maytag MAH8700AWW 03 - DOOR

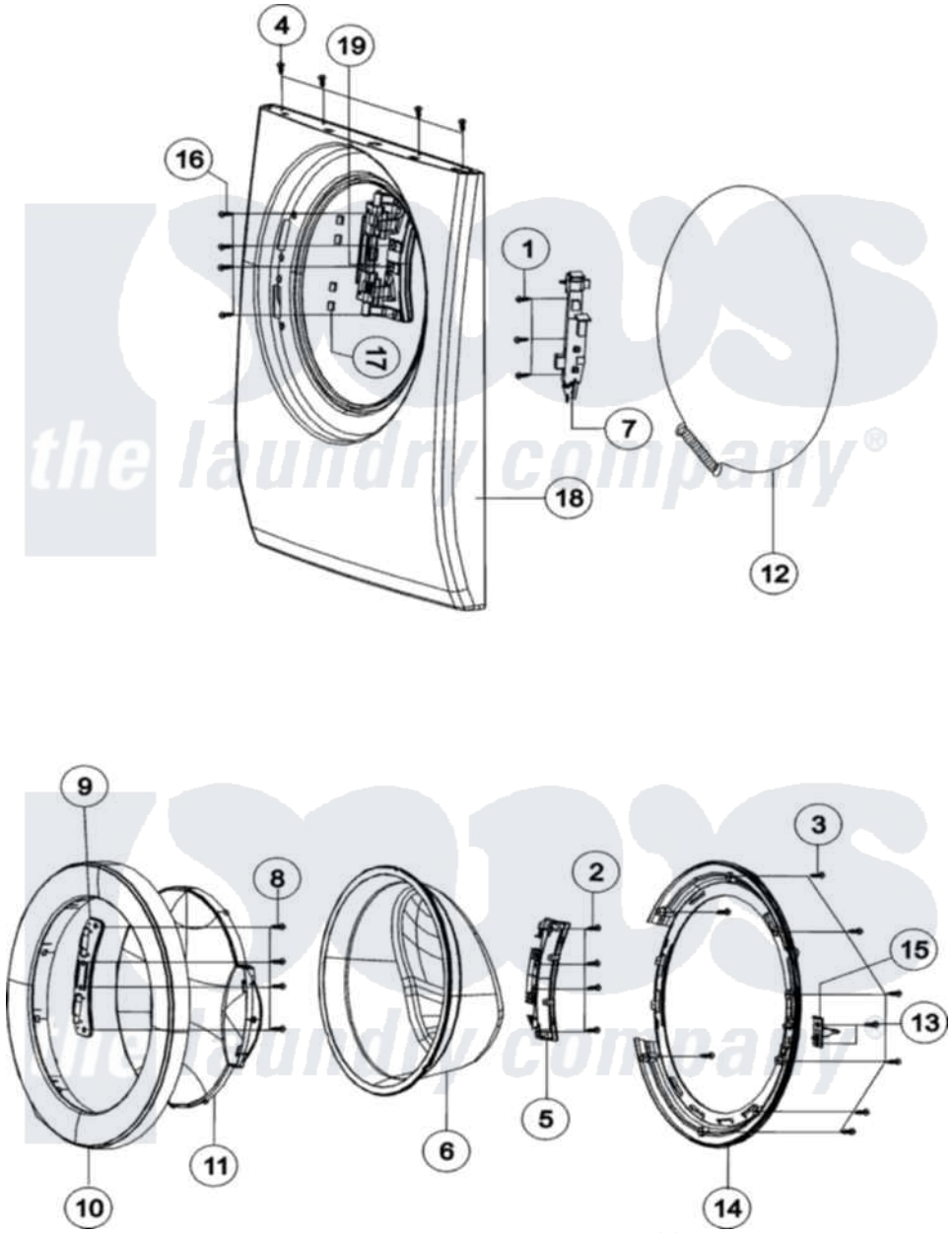

Maytag Residential Maytag MAH8700AWW Washer Parts Parts Diagram 03 - DOOR
Click on the part number to view part

Item	Original Part Number	Replaced By	Status	Part Description
1	34001251		Not Available	SCREW, TAPPING
2	34001251		Not Available	SCREW, TAPPING
3	34001251		Not Available	SCREW, TAPPING
4	34001252			Screw
5	34001253			Guide-Holder Glass
6	34001254			Glass, Door
7	34001265	8182634		Lock, Door
8	34001232	98008545		Screw
9	34001255			Bracket-Holder
10	34001256			Cover-Door
11	34001257			Door Safety
12	34001266			Clamp, Bellow To Front Panel
13	34001259			Screw
14	34001285			Holder-Glass
15	34001260			Hook, Door
16	34001286			Screw

17	34001262	Guide-Bar
18	34001467	Front Panel
"	34001263	Frame-Front Lu
19	34001264	Assembly-Hinge

the laundry company®
the laundry company®
the laundry company®