Maytag MAV7600CGW 06 - TRANSMISSION

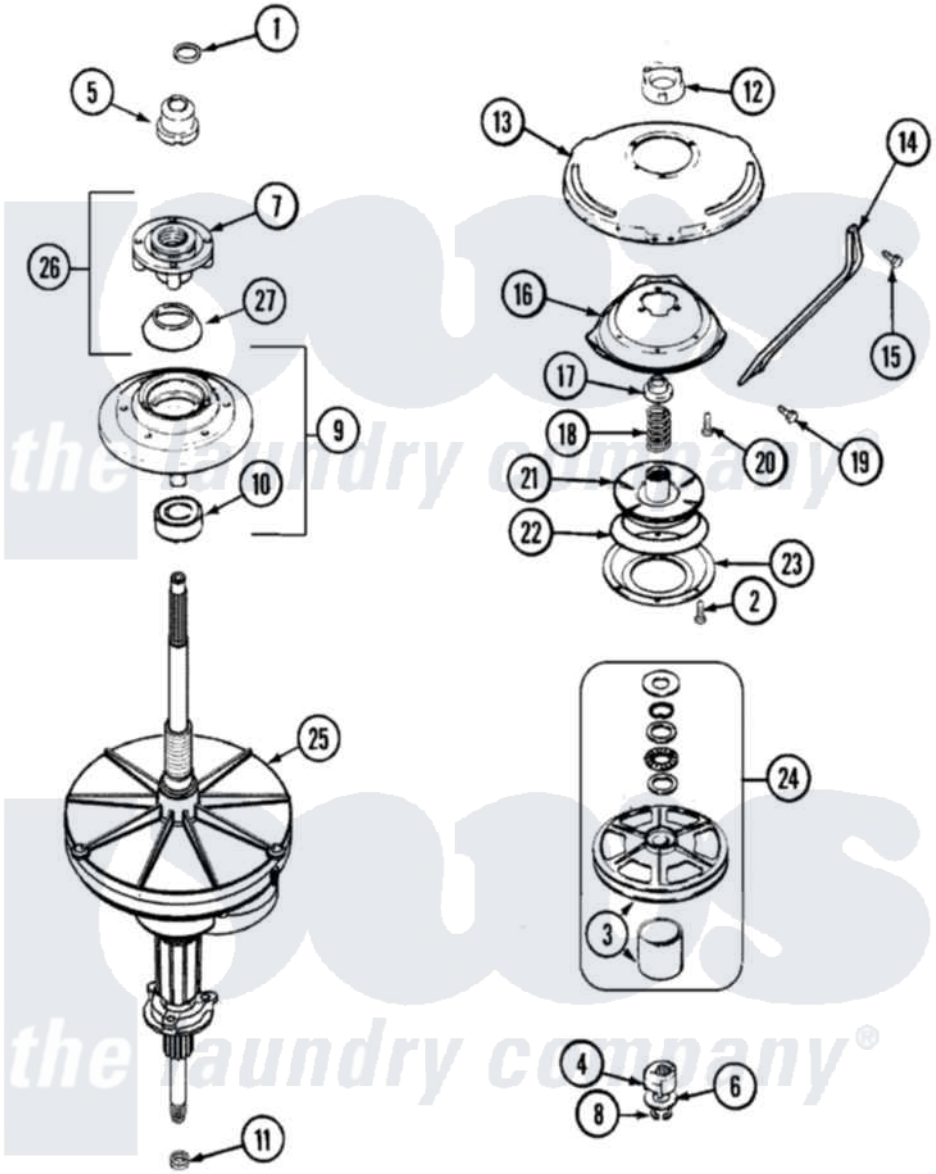

Maytag Residential Maytag MAV7600CGW Washer Parts Parts Diagram 06 - TRANSMISSION
Click on the part number to view part

Item	Original Part Number	Replaced By	Status	Part Description
1	25-7941			"O" Ring, Agtr Drive Shaft
2	21001065			Screw, No.10-24 x .50 Hxnibhd
3	12001797	12002213		Thrust Bearing Kit
4	LA-2007	12002213		Thrust Bearing Kit
5	21001533	35-5655-1		Seal
6	35-2132			Washer, 1.25ODX.530IDX.032
"	35-2082			Washer, 1.25ODX.530IDX.062
7	21001515	12001598		Tub Seal Assembly--W
8	25-7854			Ring, Retaining
9	12001598			Tub Seal Assembly--W
10	35-2205			Bearing, Spin
11	35-2010	207843		Lip Seal Repair Kit
12	35-2205			Bearing, Spin
"	21001511	12001562		Bearing Assembly
13	21001518			Support, Tub
14	21001532			Brace, Tub

15	25-7895	21001858	Screw 5/16-18 x 1/2
16	21001163		Housing, Suspension
17	35-2017		Retainer, Brake Spring
18	31001285	21001910	Spring, Brake
19	25-7930	21001858	Screw 5/16-18 x 1/2
20	21001509		Screw, High Performance Plastic
21	35-2948	35-6714	Brake Roto
22	21001161	21002026	Snubber
23	35-2018	35-6918	Stator, Brake
24	12500036	12002213	Thrust Bearing Kit
25	21001536	35-6615	Ht TranS S
"	21001867	35-6615	Ht TranS S
26	21001868	W10219156	Tub Seal
"	21001508	12001561	Bearing And Seal Housing Assembly
27	35-2974		Tub Seal/Hub Assembly

the laundry company®
the laundry company®
the laundry company®