Maytag MAV7600CGW 08 - WIRING INFORMATION

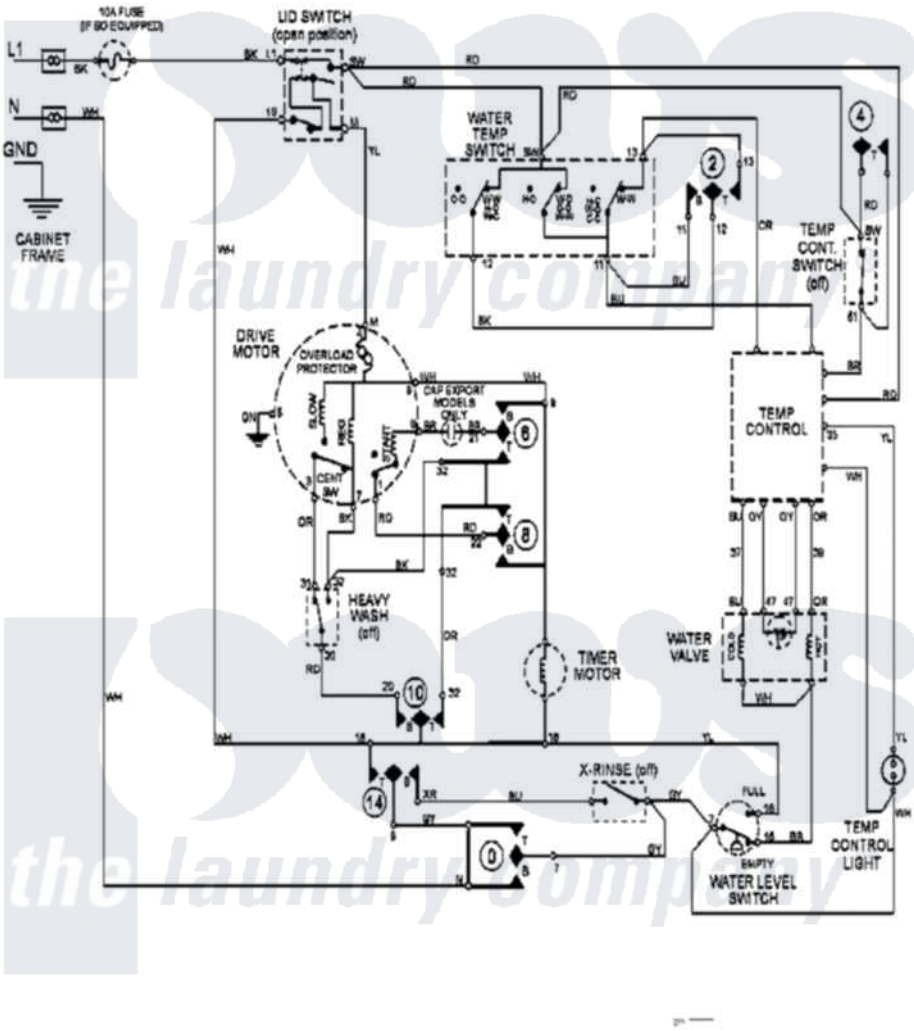

Maytag Residential Maytag MAV7600CGW Washer Parts Parts Diagram 08 - WIRING INFORMATION
Click on the part number to view part

Item	Original Part Number	Replaced By	Status	Part Description
NI	15002928		Not Available	WIRING INFORMATION