Maytag MAV7750CGW 01 - BASE

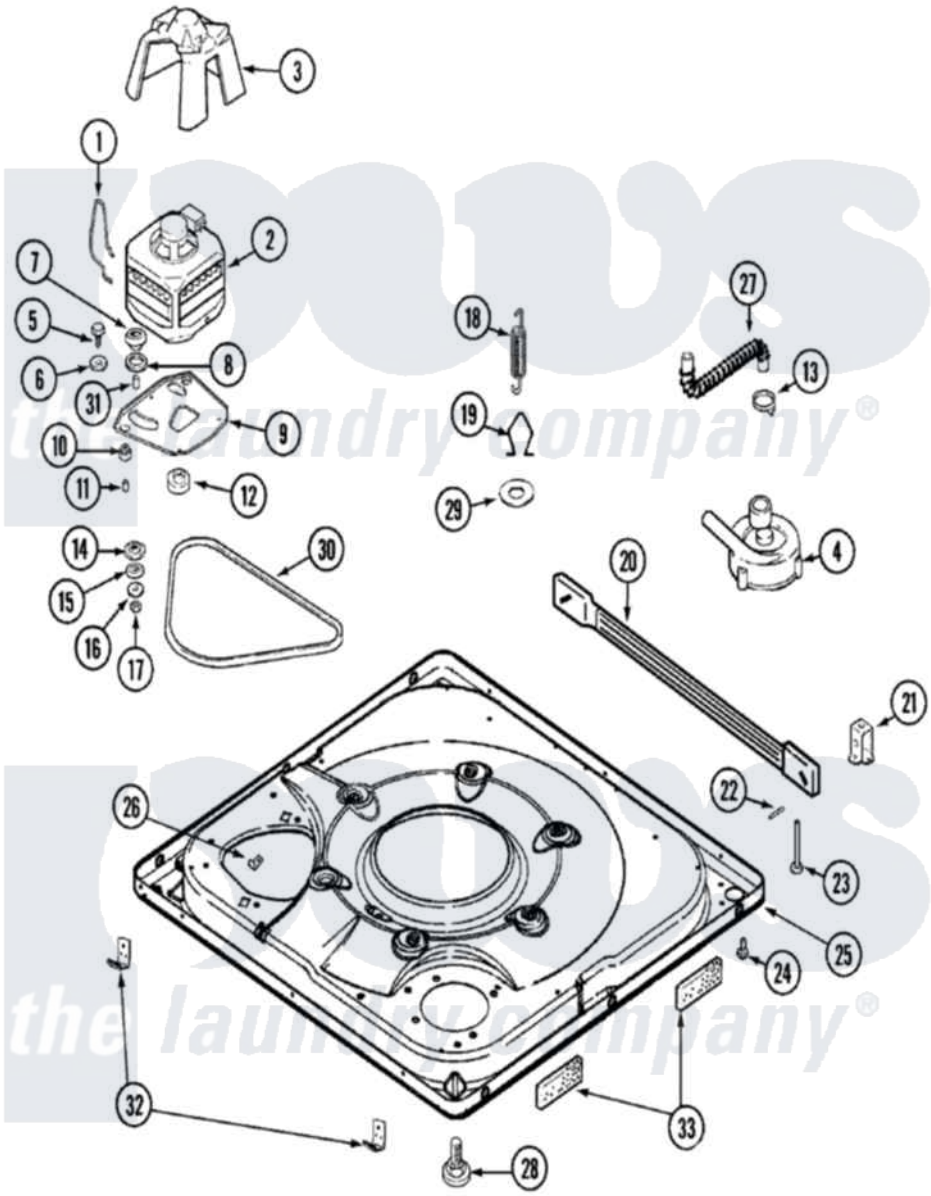

Maytag Residential Maytag MAV7750CGW Washer Parts Parts Diagram 01 - BASE
Click on the part number to view part

Item	Original Part Number	Replaced By	Status	Part Description
1	22004376			Spring, Motor Pivot
2	22003712			Motor, Export
3	22002019			Screw, Wire Clip To Motor Cnt
"	22002721			Shield, Motor
4	22004055	8534097		Screw
"	21001873	35-6780		Pump-Water
5	25-7833	21001977		Screw
6	25-7834			Washer, Motor/Base Screw
7	33-9946			Isolator, Motor
8	35-3570			Washer, Motor Pivot
9	21001366	21001783		Plate And Screw Assembly
"	35-2065			Pad, Motor Plate
10	21001486			Foot Slide, Isolator
"	22004348			Slide, Motor Pivot
"	35-3646			Isolator, Motor Plate
"	21001906	35-6465		Pump Assem

11	25-7831		Spacer, Mounting
12	33-1171	21001833	Pulley, Motor
"	25-7117		Set Screw
"	22004297	21001950	MoTor, 2SP 1/2hp 120V/60Hz Hi-Tor
13	22002853	285655	Clamp, Hose
14	35-3571		Slide, Motor Pivot
15	33-9967		Washer, Motor Isolator
16	25-7047		Washer, Flat
17	25-7325	Y707702	Locknut
18	21001598		Spring, Suspension
19	21001166		Hook, Suspension Spring
20	21001754	21001881	Bar, Stabilizer
21	35-2046		Bracket, Stabilizer
22	35-2052		Pin, Stabilizer
23	35-3020	22004469	Leg And Foot Self Stabalizing
25	22003390		Base
26	25-7845		Speednut, Motor
27	22003285		Hose, Tub To Pump
28	35-3507	25001119	Foot And Pad Assembly
29	Y25-7951		Washer, Suspension Hook
30	21352320		Belt, Drive
31	25-7830		Spacer
32	22002239		Clip, Front Panel
"	22003735		Screw, No.10-16 x 1/2 Ab Truss
"	22002966	692771	Nut, Idler Bracket To Base
33	22002782		Pad, Foam
34	33001989		Retainer, Vault Switch

the laundry company®