Maytag MAVT734EWW 03 - CONTROL PANEL

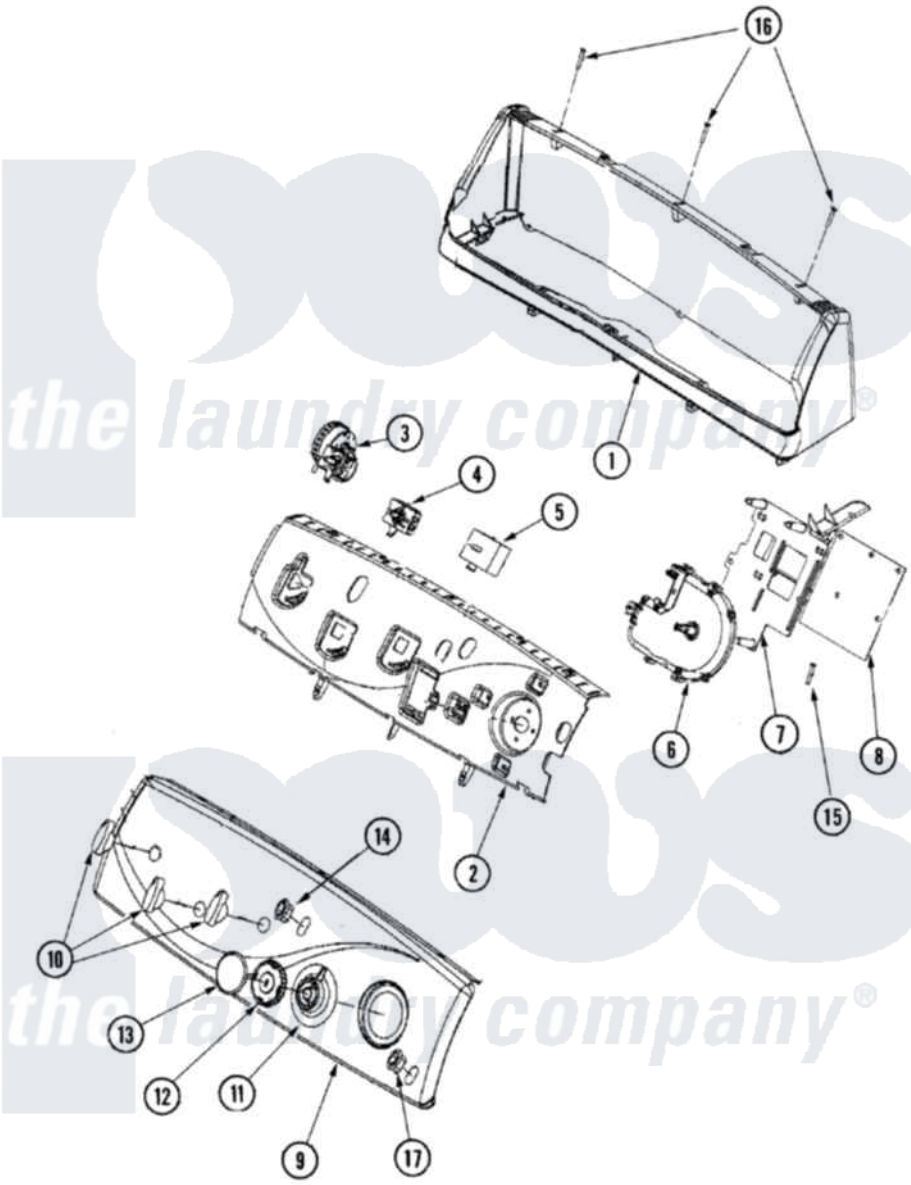

Maytag Residential Maytag MAVT734EWW Washer Parts Parts Diagram 03 - CONTROL PANEL
Click on the part number to view part

Item	Original Part Number	Replaced By	Status	Part Description
1	22003960		Not Available	CONSOLE HOUSING (WHT)
2	22003955			Switch Support
3	22004069			5 Position Pressure Switch
4	22004266			Switch, 4 Temp Rotary
"	22003961			4 Position Rotary Temp Switch 5
5	22004004			5 Position Rotary Speed Switch
6	22004070			Timer
"	33002917			Screw, No.10-16
7	22003983			Act Timer Bracket
8	22004106			Temp Control Board
9	22004173			Facia -
10	22003987			Control Knob White
11	22003953	22004165		Timer Dial Skirt
12	22003993			Timer Knob
13	22003989			Timer Cap White

14	22003977	74010226	Switch, Rocker W/Shield
15	33001855	33002917	Screw, No.10-16
16	22003938	8534058	Screw
17	22003981		Switch, Momentary Rocker