Maytag MDE16MNDYW 07 - WIRING INFORMATION

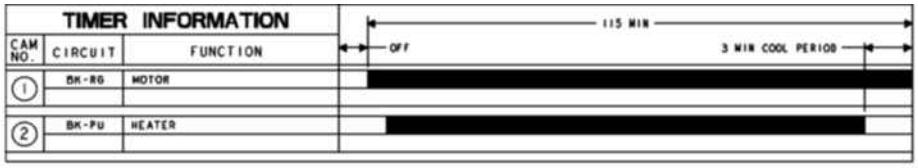

TIMER INFORMATION		
CAM NO.	CIRCUIT	FUNCTION
1	BK-RG	MOTOR
2	BK-PU	HEATER

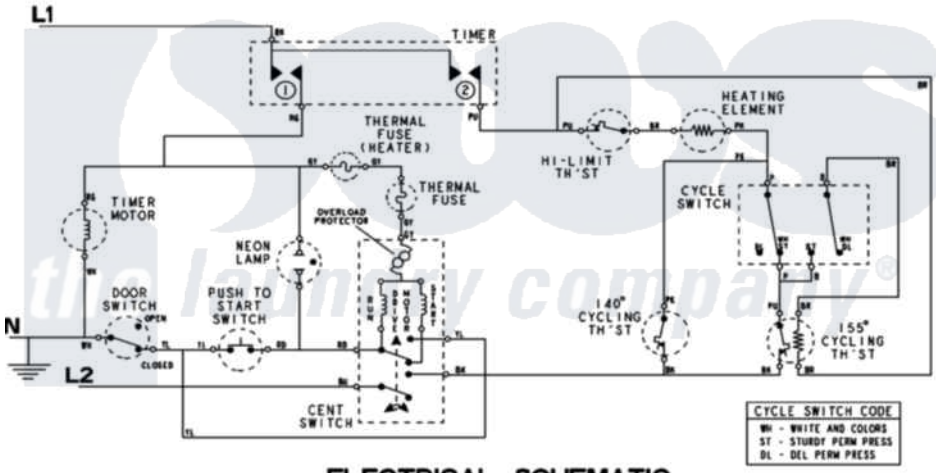

ELECTRICAL SCHEMATIC

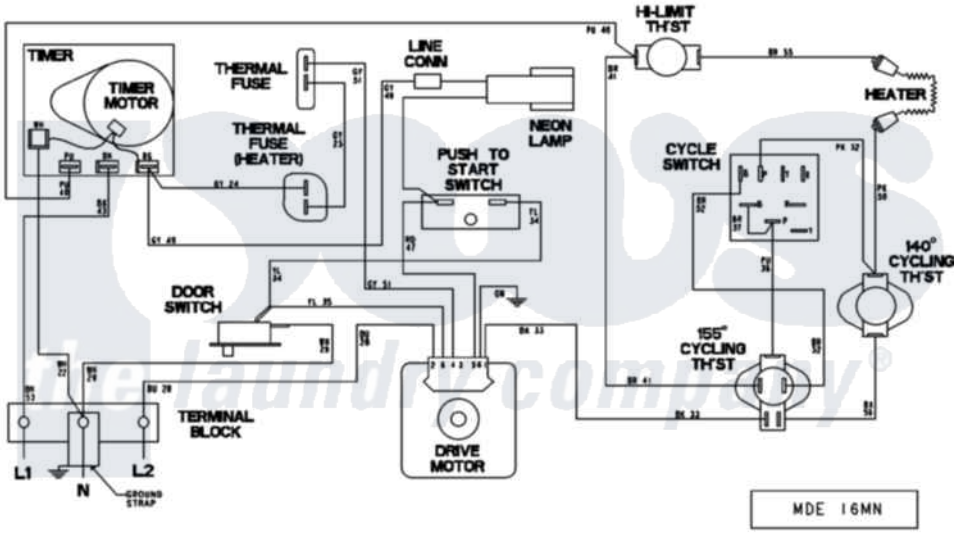

ELECTRICAL WIRING DIAGRAM

Maytag Residential Maytag MDE16MNDYW Dryer Parts Parts Diagram 07 - WIRING INFORMATION
Click on the part number to view part

Item	Original Part Number	Replaced By	Status	Part Description
001	NLA		Not Available	WIRING INFORMATION

the laundry company®