Maytag MDE21PNDYW 05 - TUMBLER

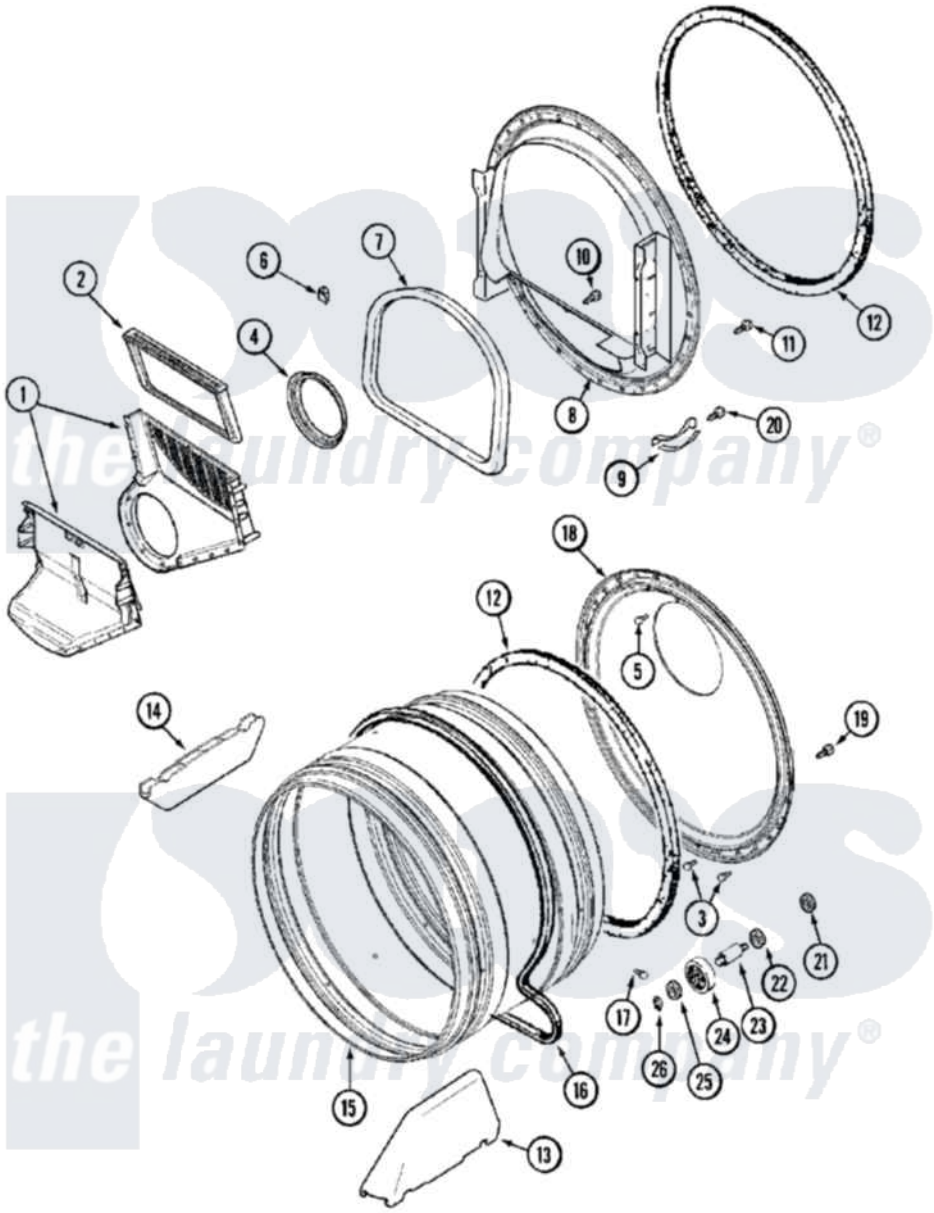

Maytag Residential Maytag MDE21PNDYW Dryer Parts Parts Diagram 05 - TUMBLER
Click on the part number to view part

Item	Original Part Number	Replaced By	Status	Part Description
001	33001799			Outlet Duct Assembly Note: Outlet Duct Assembly
002	33002790			Lint Filter
003	210932			Screw, No.8 X 9/16 Ctsk Note: Screw, Inlet Duct
004	33002560			Seal, Blower
005	22001996	3370225		Screw
006	Y310376			Clip, Door Switch Harness
007	33001767			Seal, Shroud
008	33001802			Front, Tumbler
009	306508			Tumbler Bearing Kit ----W
010	NLA		Not Available	SCREW, OUTLET DUCT (PHILLIPS)
011	33001855	33002917		Screw, No.10-16
012	33001807			Seal, Tumbler
013	33001756	33002032		Baffle
014	33001755			Baffle

015	33001794	33001889	Tumbler
016	33002535		V-Belt
017	33001788	33002973	Screw, No.9-15 X 1.00 Hx WS
018	33002779		Tumbler Back And Seal As-Pack
"	33003037		Tumbler Back And Seal
019	22001995		Screw Note: Screw, Tumbler Front And Shroud
020	210720		Rivet, Bearing To Tumbler Frnt
021	33001443		Nut, Hex
022	Y313347	312535	Washer, Vault Mounting Brk.
023	Y312948	6-3129480	Shaft- Tumbler
024	Y303373	12001541	Drum Roller/Washer Assembly--W
025	312535		Washer, Vault Mounting Brk.
026	410233	9703438	Ring-Retnr

the laundry company®
the laundry company®
the laundry company®