Maytag MDE7400AZW 08 - WIRING INFORMATION

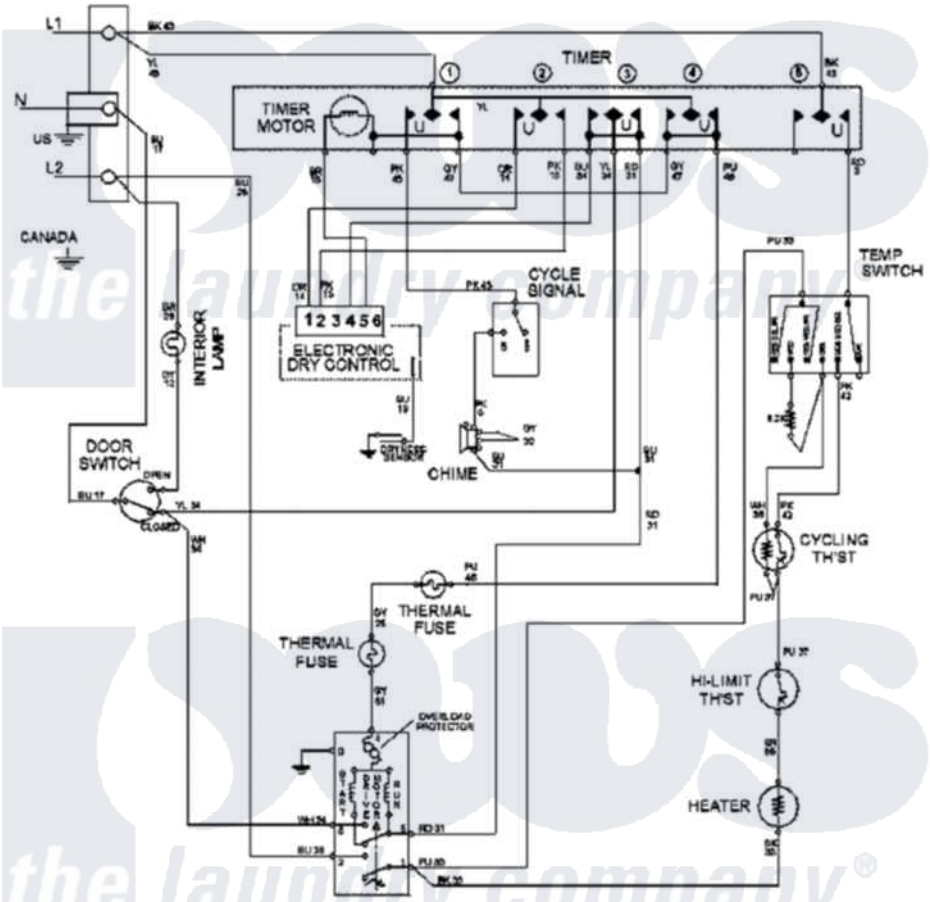

Maytag Residential Maytag MDE7400AZW Dryer Parts Parts Diagram 08 - WIRING INFORMATION
Click on the part number to view part

Item	Original Part Number	Replaced By	Status	Part Description
1	15003279		Not Available	WIRING INFORMATION (ELEC)