Maytag MDE9557AZA 08 - DOOR (MDG)

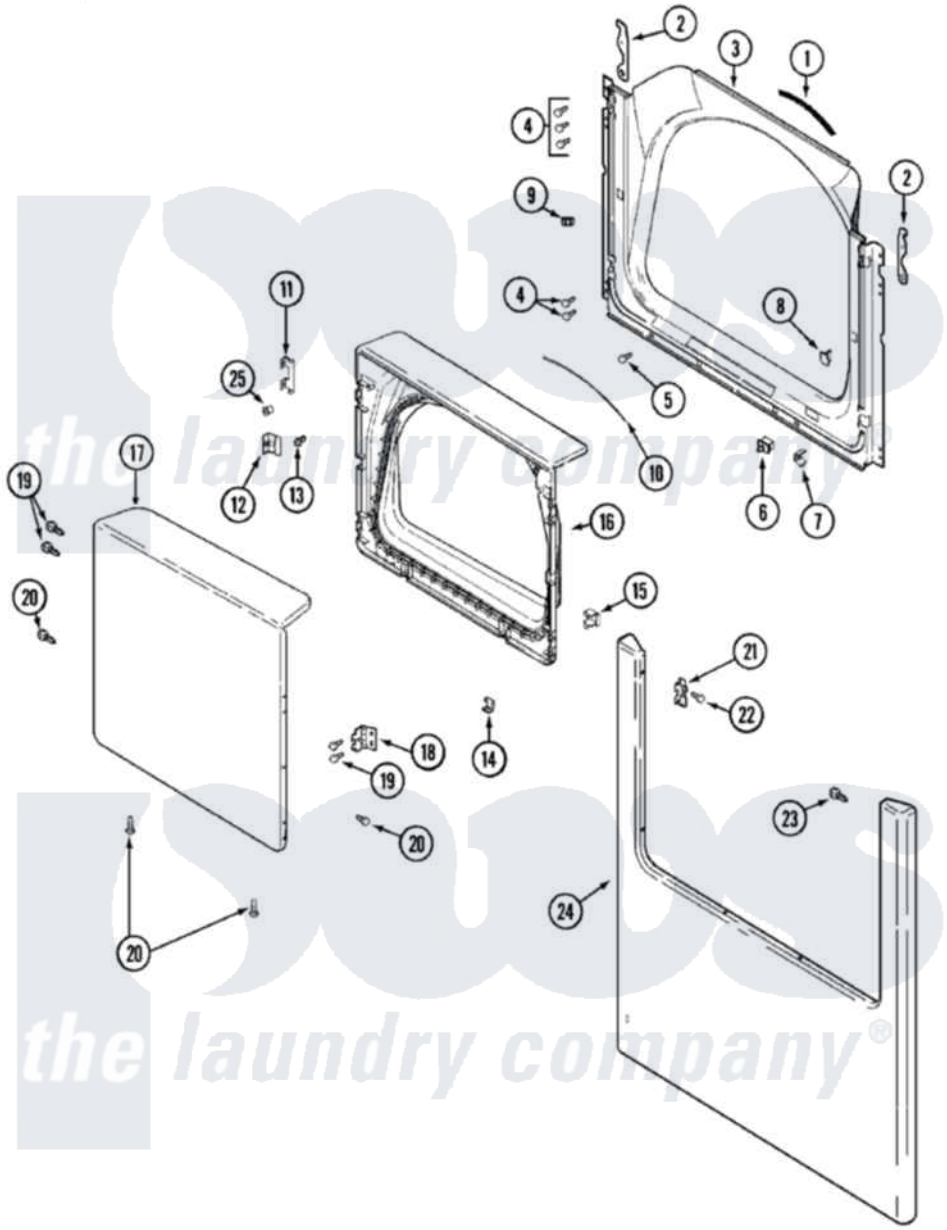

Maytag Residential Maytag MDE9557AZA Dryer Parts Parts Diagram 08 - DOOR (MDG)
Click on the part number to view part

Item	Original Part Number	Replaced By	Status	Part Description
2	22002247	33002597		Hook, Security
4	22001995			Screw Note: Screw, Tumbler Front And Shroud
5	33001768			Screw, Shroud Note: Screw, Shroud And Outlet Duct
6	33001508	W10169313		Switch-Dor
7	33001760			Bracket, Hinge
8	33001174	LA-1003		Door Catch Kit
9	Y304578	LA-1003		Door Catch Kit
"	33001791	306436		Door Latch Kit--W
10	33002094			Seal, Door
11	22002038			Clip, Door
12	33001793			Bracket, Strike
13	33001761			Strike, Door
14	22002039			Clip, Door
15	33001763			Plug, Inner Door
17	22001817			Sheet, Sound Damper

18	33001759		Hinge, Door
19	22002062	98006631	Screw
22	33001787		Screw, Hinge Note: Screw, Hinge Hole Cover
23	22002012		Screw, Hinge Note: Screw, Hinge Bracket
25	33001771		Bushing, Inner Door

the laundry company®

the laundry company®

the laundry company®