Maytag MDG10PSAGL 04 - DOOR

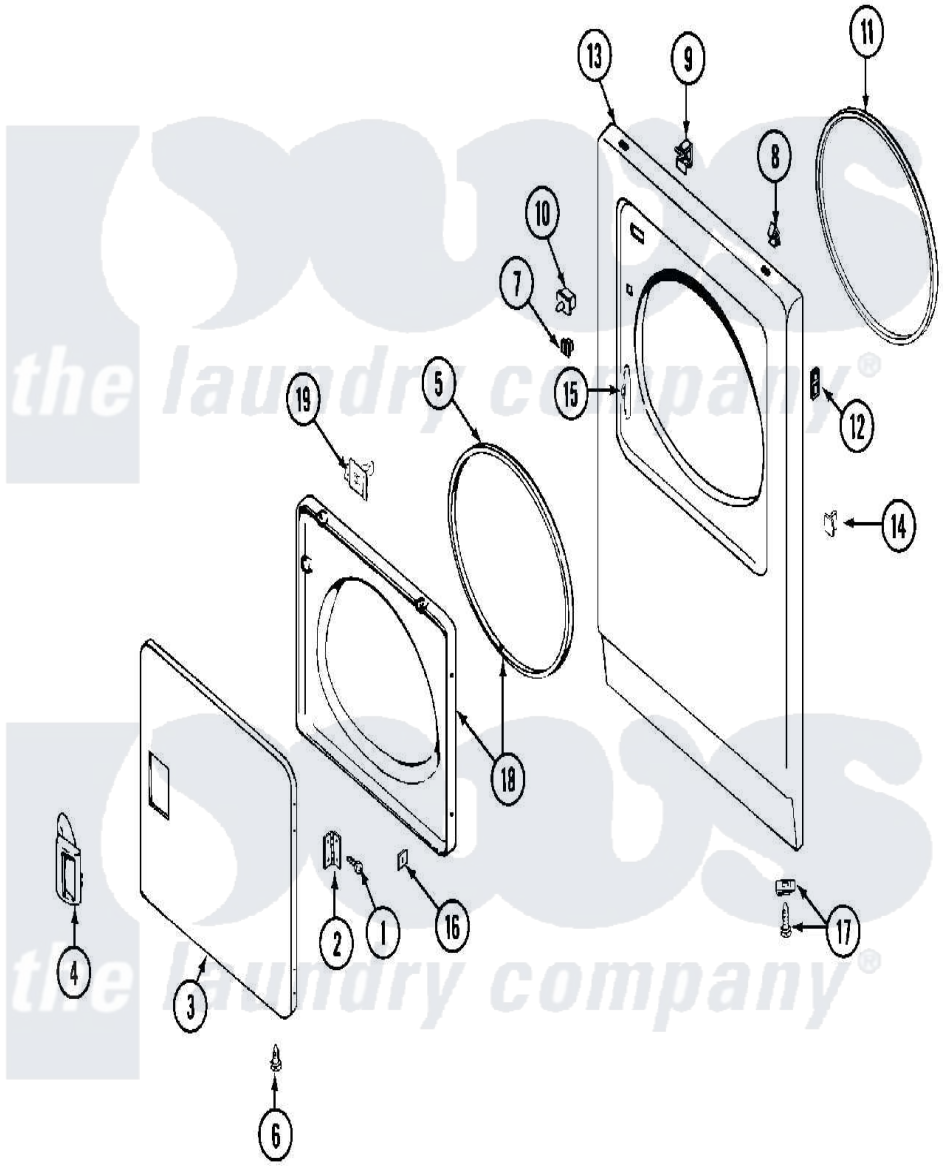

Maytag Residential Maytag MDG10PSAGL Dryer Parts Parts Diagram 04 - DOOR
Click on the part number to view part

Item	Original Part Number	Replaced By	Status	Part Description
001	Y314062			Screw, Door Hinge And Panel
002	33001230			Hinge, Door
003	33001240			Door
"	33001257	33001240		Door
004	33001241			Handle, Door
"	33001254	37001047		Handle, Door
005	33001131			Seal, Door
006	33001132	33002342		Plug, Sifht Hole
"	33001168		Not Available	PLUG, SIGHT HOLE (ALM)
007	Y304578	LA-1003		Door Catch Kit
008	212982	22001650		Fastener, Spring
009	Y310376			Clip, Door Switch Harness
010	33001436			Switch, Door
011	314937			Seal, Front Panel
012	NLA		Not Available	SPEEDNUT, HINGE SCREW
"	NLA		Not Available	SCREW, PLASTIC

013	NLA	Not Available	PANEL, FRONT (WHT)
014	NLA	Not Available	PLUG, DOOR CATCH
015	33001175		Cover, Hinge Hole
"	33001176		Cover, Hinge Hole
016	Y313910		Clip, Door Liner To Outer Panel
017	204439		Screw And Fstner Assembly
018	33001243	Not Available	PANEL, INNER DOOR (W/SEAL)
019	33001305		Strike, Door

the laundry company®
the laundry company®
the laundry company®