Maytag MDG12PSBBW 05 - CABINET-REAR

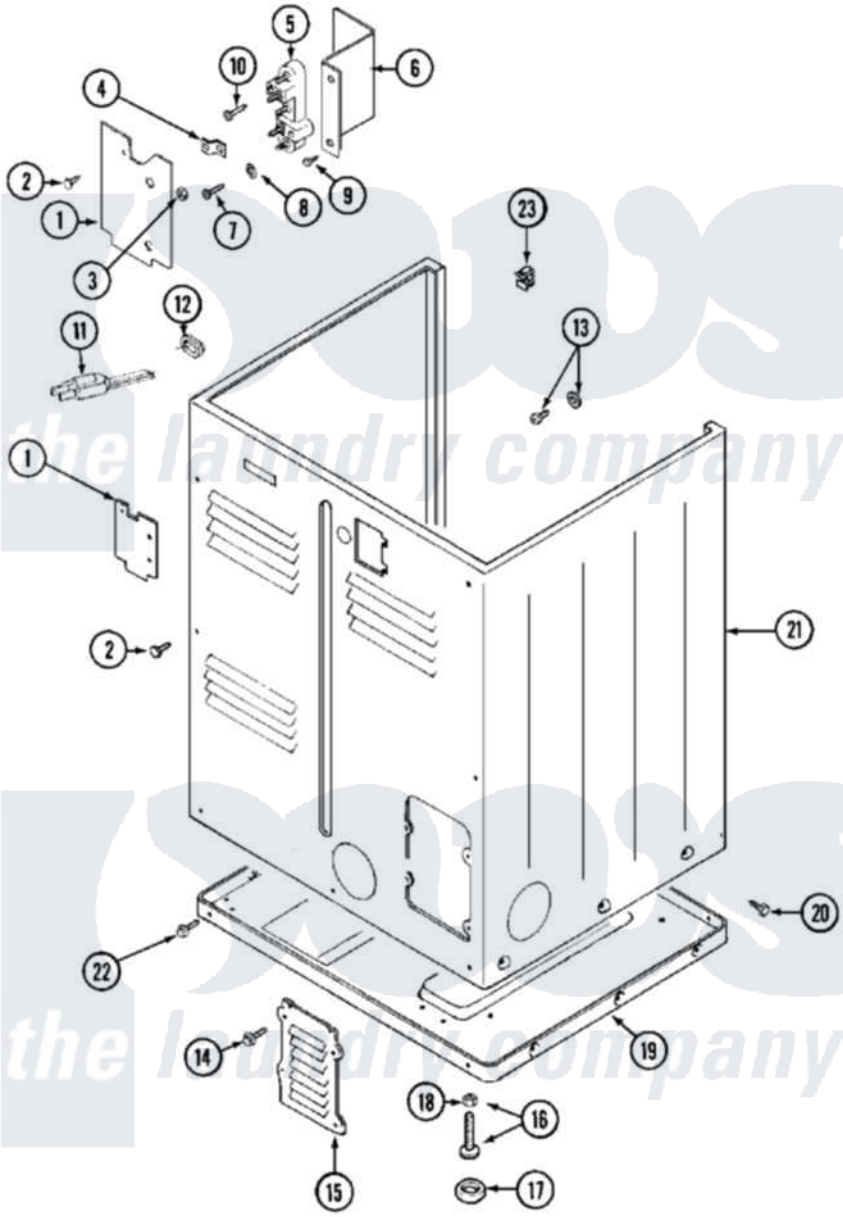

Maytag Residential Maytag MDG12PSBBW Dryer Parts Parts Diagram 05 - CABINET-REAR
Click on the part number to view part

Item	Original Part Number	Replaced By	Status	Part Description
001	Y312905		Not Available	COVER, TERMINAL
002	Y313561			Screw----NA
003	311484	112432		Nut
004	Y312184			Strap, Grounding
005	33001244			Block, Terminal
006	Y312904			Bracket, Terminal Block
007	Y312209	W10001200		Screw
008	Y311270			Washer, Terminal Block
009	Y310632	1163839		Screw
010	NLA		Not Available	SCREW, GROUND STRAP
011	22001178	22003062		Cord, Power
"	305168	33002916		Power Cord, Canadian 240V
"	33001425			Locknut, Eared For Canadian
012	211881			Grommet, Cord Part Not Used-Gas Models Only
013	NLA		Not Available	SCREW & WASHER ASSY.
014	216423	3370225		Screw

015	Y312951		Not Available	ACCESS COVER, BACK
016	Y305086			Adjustable Leg And Nut
017	Y314137			Foot, Rubber
018	Y052740	62739		Nut, Lock
019	Y303361		Not Available	BASE ASSY. (UPPER & LOWER)
020	213007			Xfor Cabinet See Cabinet, Back
021	NLA		Not Available	CABINET (WHT)
022	Y313561			Screw----NA
"	Y310632	1163839		Screw
023	Y310376			Clip, Door Switch Harness

the laundry company®
the laundry company®
the laundry company®