Maytag MDG13PDAGW 02 - FRONT

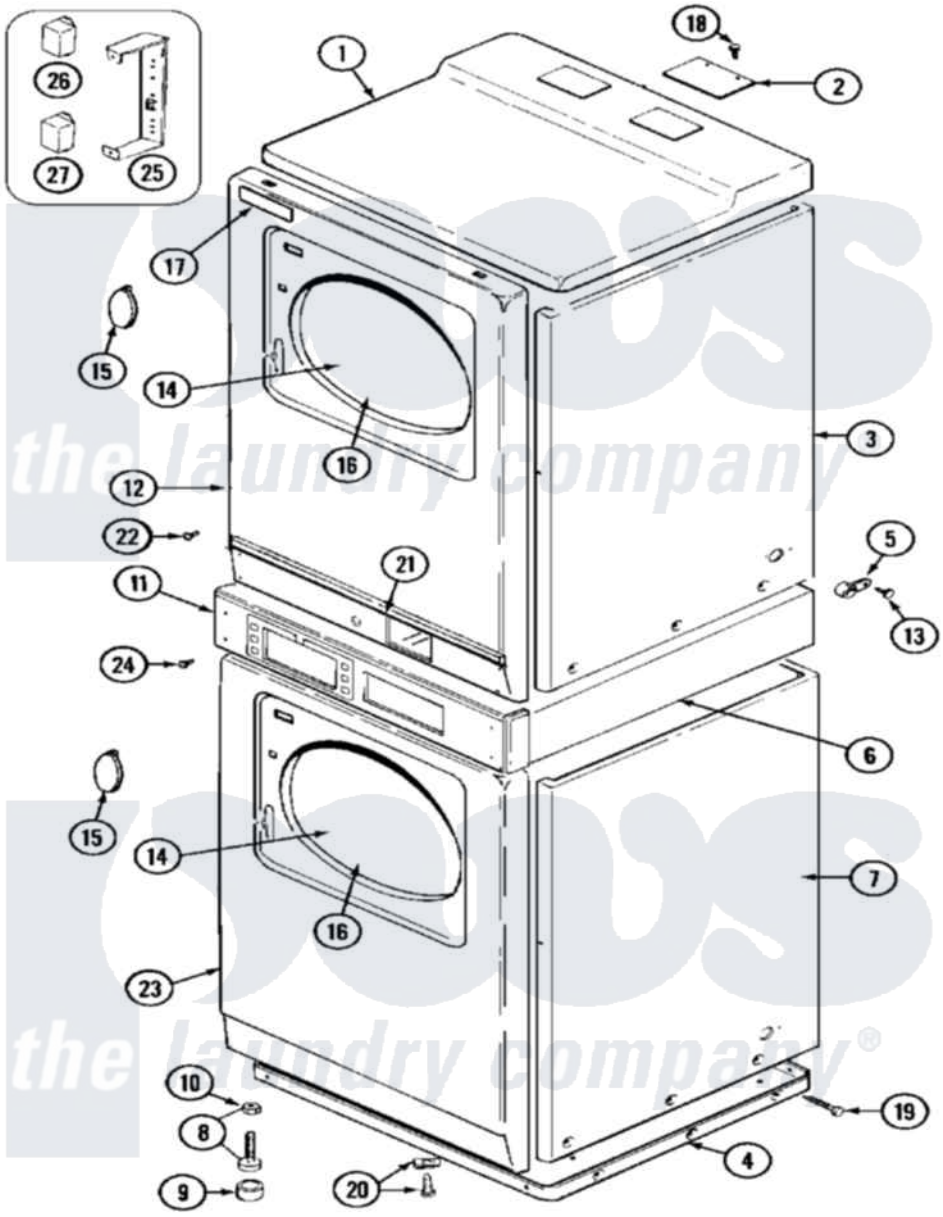

Maytag Residential Maytag MDG13PDAGW Dryer Parts Parts Diagram 02 - FRONT
Click on the part number to view part

Item	Original Part Number	Replaced By	Status	Part Description
001	NLA		Not Available	COVER, TOP (WHT)
002	NLA		Not Available	PLATE, COVER
003	NLA		Not Available	CABINET (UPR-WHT)
004	306261			Base Assembly, Upper Dryer
"	306530		Not Available	BASE ASSEMBLY (LOWER)
"	Y310632	1163839		Screw
005	910768	M0280301		Tie Electr
006	310933	33002194		Nut, Speed
"	314663	214354		Screw, Top Cover To Cabnt.
"	911050	4312464		Screw
"	NLA		Not Available	SUPPORT ASSEMBLY (WHT)
"	Y310632	1163839		Screw
007	NLA		Not Available	CABINET (LWR-WHT)
008	Y302699	22003428		Leg, Adjustable
009	210684			Foot, Adjustable Leg
010	210385			Lock Nut For Adjustable Leg

011	NLA		Not Available	EXTRUSION, CONTROL (LWR)
012	314666		Not Available	SCREW, PANEL (UPR)
"	33001419		Not Available	PANEL, FRONT (UPR-WHT)
"	33001486	98008544		Screw
"	NLA		Not Available	CLIP, CABINET SCREW
013	211168	W10139210		Screw, 8-18 X 5/16
014	33001203		Not Available	PANEL, CLEAR INNER (W/SEAL)
015	314939			Handle, Door
016	314967		Not Available	DOOR W/WINDOW OUTER HALF (WHT)
017	33001711	33002936		Medallion-
018	Y313559			Screw
019	213007			Xfor Cabinet See Cabinet, Back
020	22001496			Front Panel Fastener And Screw
021	NLA		Not Available	EXTRUSION, CONTROL (UPR)
022	215506			Screw, Control Panel Overlay
"	315489			Screw, Extrusion And Front
023	33001486	98008544		Screw
"	33001614		Not Available	PLUG, FRONT PANEL (WHT)
"	NLA		Not Available	PANEL, FRONT (LWR-WHT)
024	215506			Screw, Control Panel Overlay
025	Y313561			Screw----NA
"	314627			Bracket, Relays
"	Y310632	1163839		Screw
026	206421			Relay, Motor Reversing
"	212949	22001866		Screw, Relay
027	306398			Relay, Heater
"	Y251119	3177991		Screw

the laundry company®