Maytag MDG14PDAAL 05 - CABINET-REAR

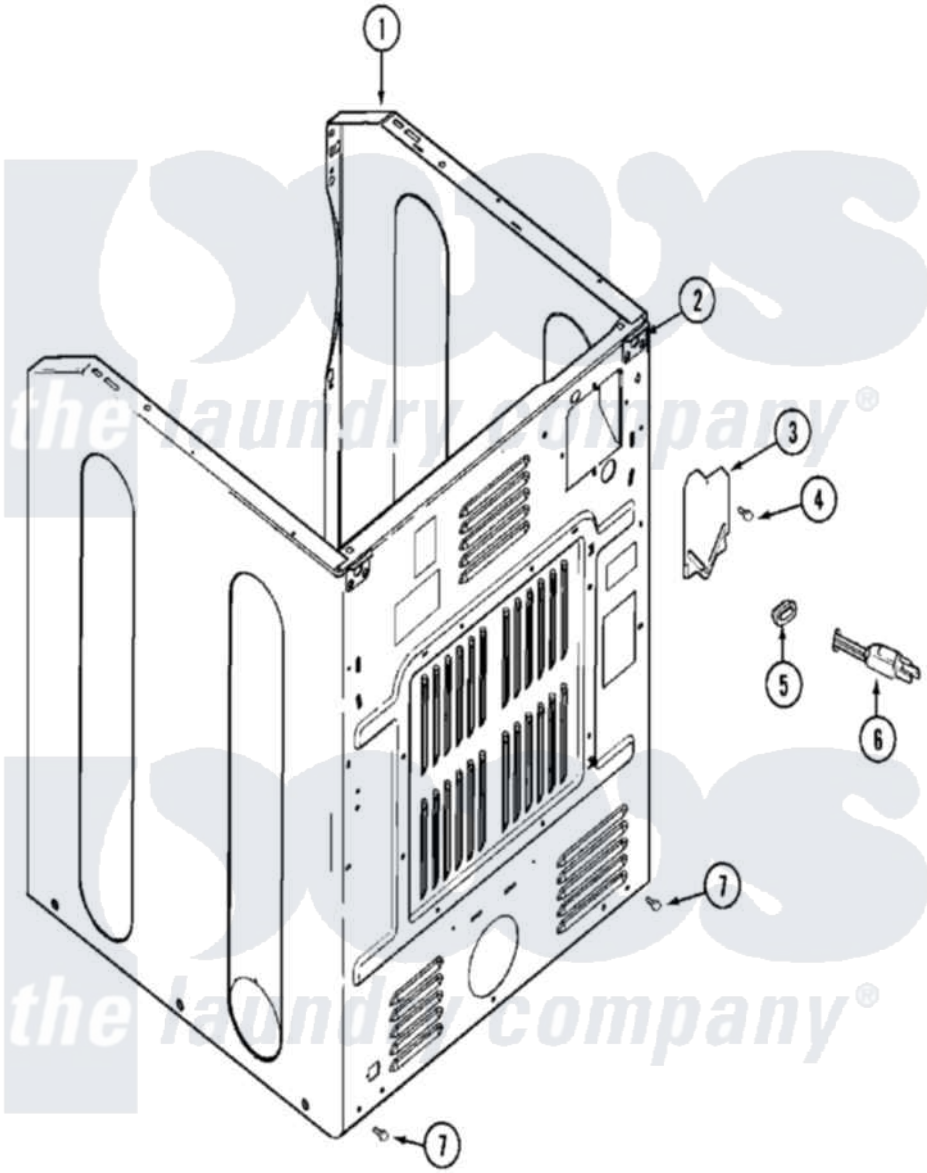

Maytag Residential Maytag MDG14PDAAL Dryer Parts Parts Diagram 05 - CABINET-REAR
Click on the part number to view part

Item	Original Part Number	Replaced By	Status	Part Description
001	NLA		Not Available	CABINET (WHT W/V-BRACKET)
002	22001995			Screw Note: Screw, Tumbler Front And Shroud
"	22003367	22004095		Hinge, Plastic
"	NLA		Not Available	BRACKET, CABINET HINGE
003	33001795			Cover, Terminal Block
004	22001995			Screw Note: Screw, Tumbler Front And Shroud
005	211881			Grommet, Cord Part Not Used-Gas Models Only
006	208784	22003062		Cord, Power
007	22001995			Screw Note: Screw, Tumbler Front And Shroud