Maytag MDG16MNDGW 01 - CONTROL PANEL

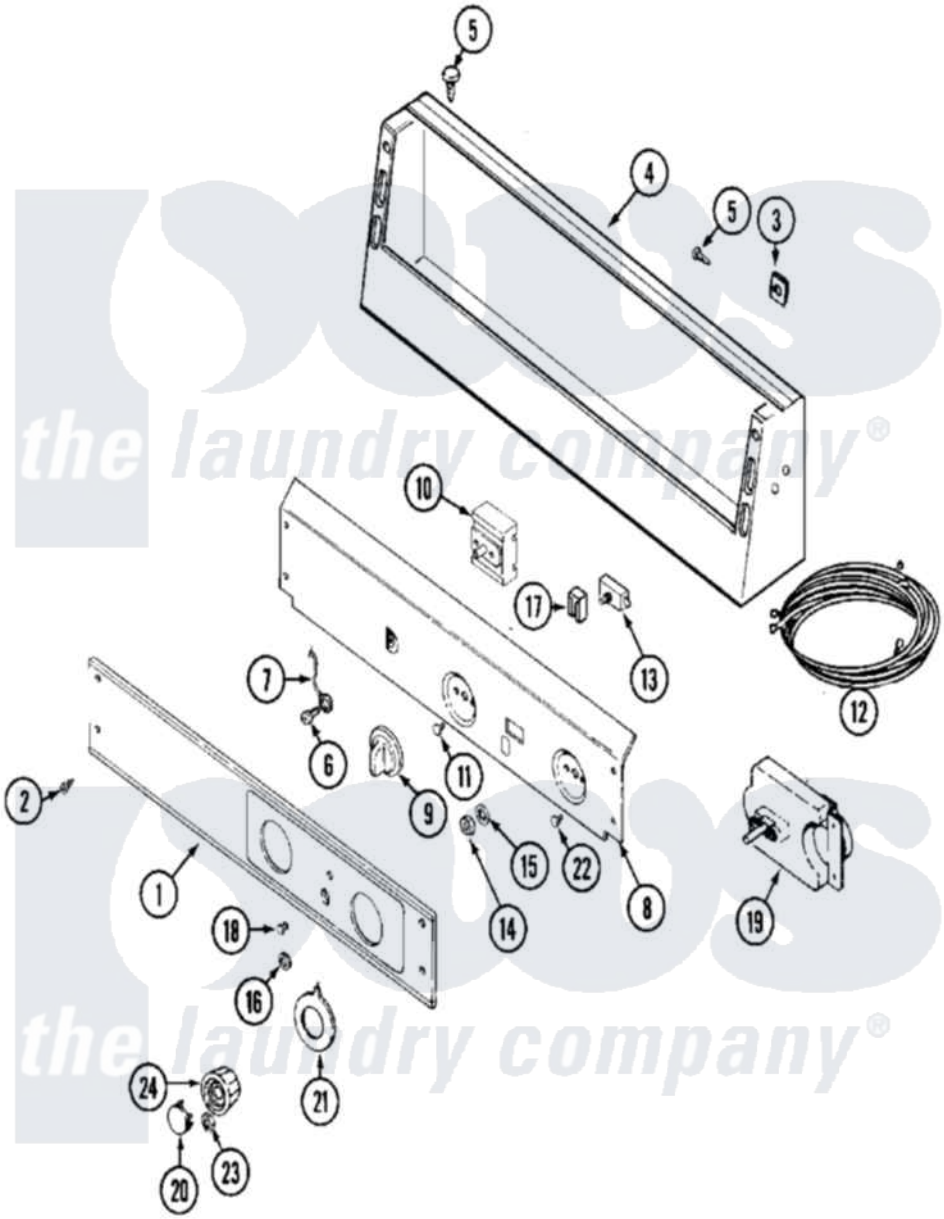

Maytag Residential Maytag MDG16MNDGW Dryer Parts Parts Diagram 01 - CONTROL PANEL
Click on the part number to view part

Item	Original Part Number	Replaced By	Status	Part Description
001	33002937			Facia - MN
002	215506			Screw, Control Panel Overlay
003	215003			Fastener, Panel And Bracket
004	22003101			Console
"	33001948			Transformer Lower
005	22001996	3370225		Screw
006	211252			Screw, Ground Wire
007	205810			Wire, Ground
008	33002524			Bracket, Back
009	306938			Knob, Selector Switch
010	307237	W10327105		Switch, Cycle Selection
"	33002276			Switch, Cycle Selector
011	Y313588	488234		Screw 8-32 X 1/4
012	33002246			Wire Harness, Main
"	33002773			Wire Harness, Main
013	306940	W10149462		Switch, Push-To-Start

014	Y312706	422617		Nut
015	312751			Lockwasher, Start Switch
016	Y312702			Knurled Nut, Start Switch
017	22001365	W10139459		Lamp-Indicator 230 V.
"	33002798	Y303703		Pilot Light
018	215564			Lens, Indicator Light
019	305214			Timer
"	Y305758			Timer 240-50
020	314723	W10133501		Cap, Knob
021	33001500			Dial, Timer Indicator
022	Y313588	488234		Screw 8-32 X 1/4
023	312273			Nut, Control Knob
024	314724			Knob For Timer
025	16009021			Manual, Service-No Refund
"	33002671			Use And Care Manual
"	33002712		Not Available	MANUAL, OWNERS

the laundry company®
the laundry company®