Maytag MDG30MC3AW 17 - DSI & BURNER ASSEMBLY

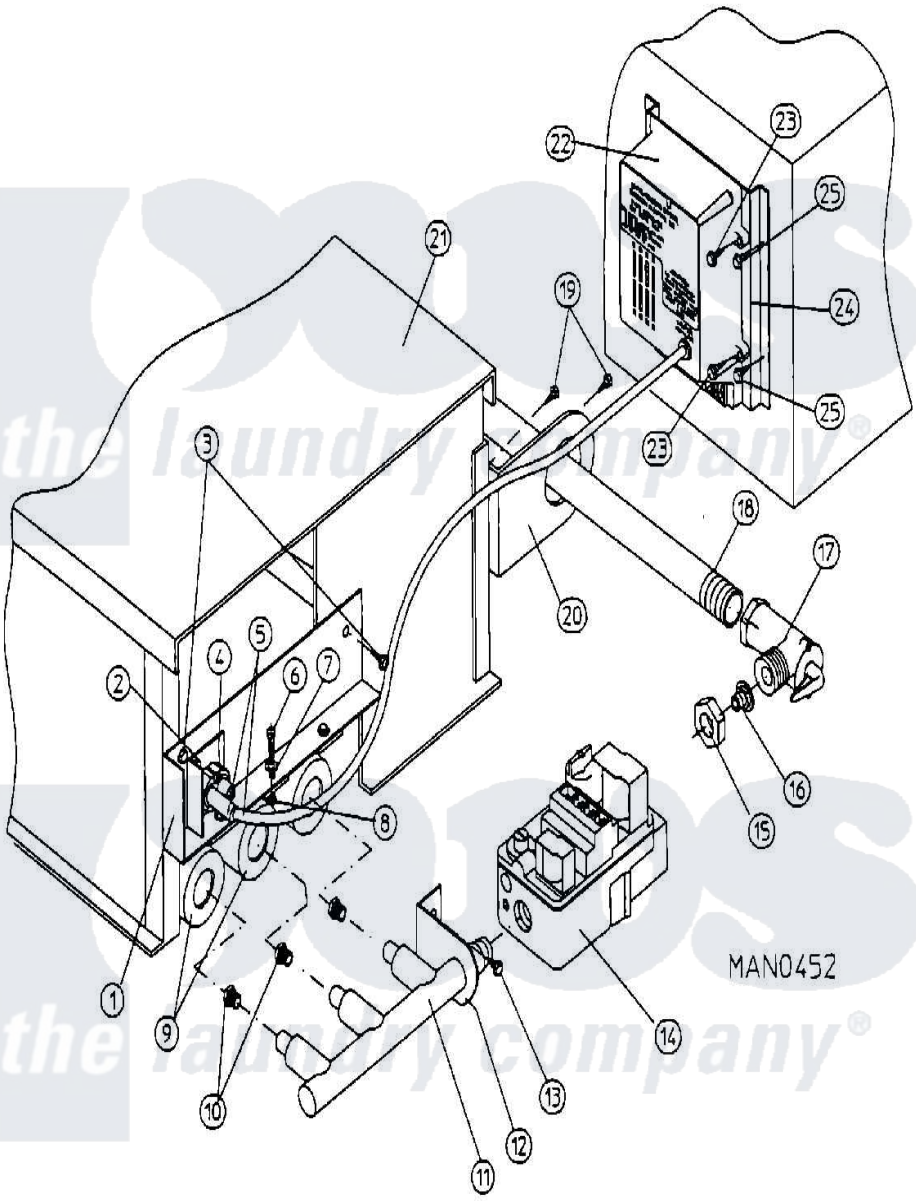

Maytag Residential Maytag MDG30MC3AW Dryer Parts Parts Diagram 17 - DSI & BURNER ASSEMBLY
Click on the part number to view part

Item	Original Part Number	Replaced By	Status	Part Description
000	W10124350		Not Available	ORDER PARTS FROM AMERICAN DRYER CORP AT 508-678-9000
001	A318030	W10146864		50 60 Si
002	A150300	5307527001		Switch
003	A150415		Not Available	SCREW, CRIMPTITE (PH. RD.HD.) (No.10-16 X 1/2`` PH. RD. HD.)
004	A128915		Not Available	DSI IGNITER & FLAME PROBE ONLY
"	A880134		Not Available	IGNITER/FLAME PROBE KIT ASSY (INCLUDES No.4 & 5)
005	A880330	W10148002		DSI Ignitor
006	A150103	150103		8-32 X 3 4
007	A153000			8 SAE WAS
008	A151001	W10146764		8-32 Pal N
009	A141105	W10146749		Large Gas
010	A140808	140808		Burner Ori
"	A140823	140823		Burner Ori

011	A141232	141232		DSI 1 2 Ma
012	A318700	W10146865		SM Burner
013	A150300	5307527001		Switch
014	A128927		Not Available	VALVE, GAS (REDUNDANT) (1/2`` 24 VAC, NATURAL GAS)
"	A140411		Not Available	CONVERSION KIT (1/2`` 24 VAC GAS VALVE (L.P.) W/O ORIFICES
015	A141325		Not Available	COLLAR, TAIL PIECE
016	A141303		Not Available	TAIL PIECE, 1/2`` UNION
017	A141305		Not Available	BODY, UNION SHUT-OFF
018	A142500			1 2-90 DEG
"	A142600	142600		1 2 Black
"	A142707	142707		1 2 X 1 1
"	A142800			Pipe, 1/2 " X 18" B.I.
"	A142809	W10146757		1 2 X 29 1
019	A150415		Not Available	SCREW, CRIMPTITE (PH. RD.HD.) (No.10-16 X 1/2`` PH. RD. HD.)
020	A318700	W10146865		SM Burner
021	A809627	809627		Ad30s Ud50
"	A809628	5300809628		Hose
"	A850852	W10147725		60 DSI Bur
022	A880815			MODULE, DSI (50HZ/60HZ)
023	A150299	150299		10 X 1 H
024	A319505		Not Available	BRACKET, DSI MODULE
025	A150301	150301		8-18 X 7
026	A880928	W10148096		Ad-30ds
027	A410001	410001		1 2 Hex L
028	W10124350		Not Available	NOTE: CONSULT FACTORY FOR ELEVATIONS OVER 2000 FT.

the laundry company®