Maytag MDG30PC2AL 05 - IDLER BEARING ASSEMBLY

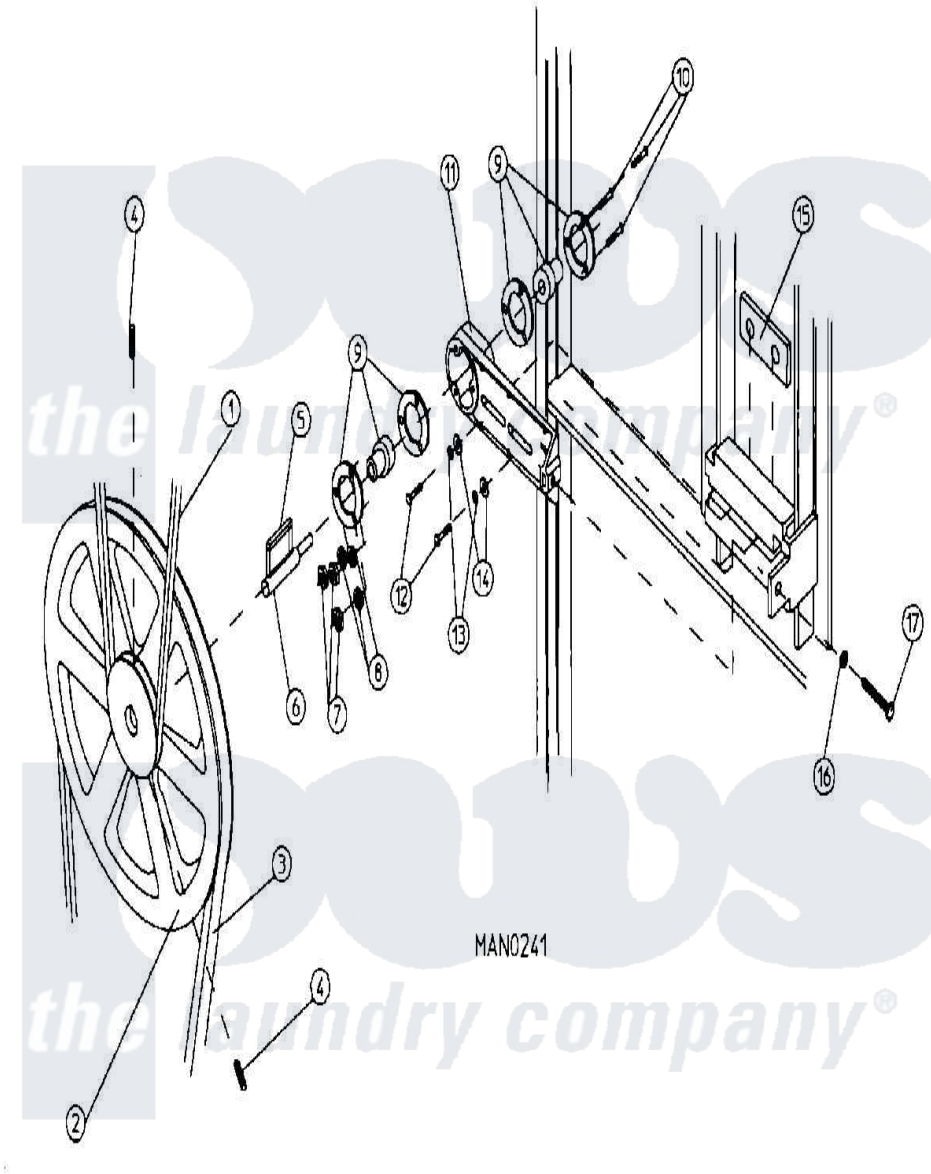

Maytag Residential Maytag MDG30PC2AL Dryer Parts Parts Diagram 05 - IDLER BEARING ASSEMBLY
Click on the part number to view part

Item	Original Part Number	Replaced By	Status	Part Description
000	W10124350		Not Available	ORDER PARTS FROM AMERICAN DRYER CORP AT 508-678-9000
001	A100108	W10146555		5l680 Belt
002	A101129	W10146631		9 X 2-1 2
003	A100110	W10146556		4l500 V be
004	A154301	154301		5 16-18 X
005	A100705	100705		3 16 X 3
006	A301850			SHAFT, IDLER (5/8`` X 3/4``)
007	A152002	152002		1 4-20 Hex
008	A153007	153007		1 4 Split
009	A100214		Not Available	BEARING, FLANGE (5/8``)
010	A150521	150521		1 4-20 X 2
011	NLA		Not Available	IDLER BEARING ASSEMBLY
012	A150617	150617		3 8-16 X 1
013	A153005	153005		3 8 Split
014	A153004	153004		3 8 X 1

015	A801009	801009	Idler Squa
016	A152004	8182933	Nut, Hex
017	A150509	150509	5 16-18 X

the laundry company®
the laundry company®
the laundry company®