Maytag MDG30PC3AL 17 - SAIL SWITCH/HI-LIMIT ASSEMBLY

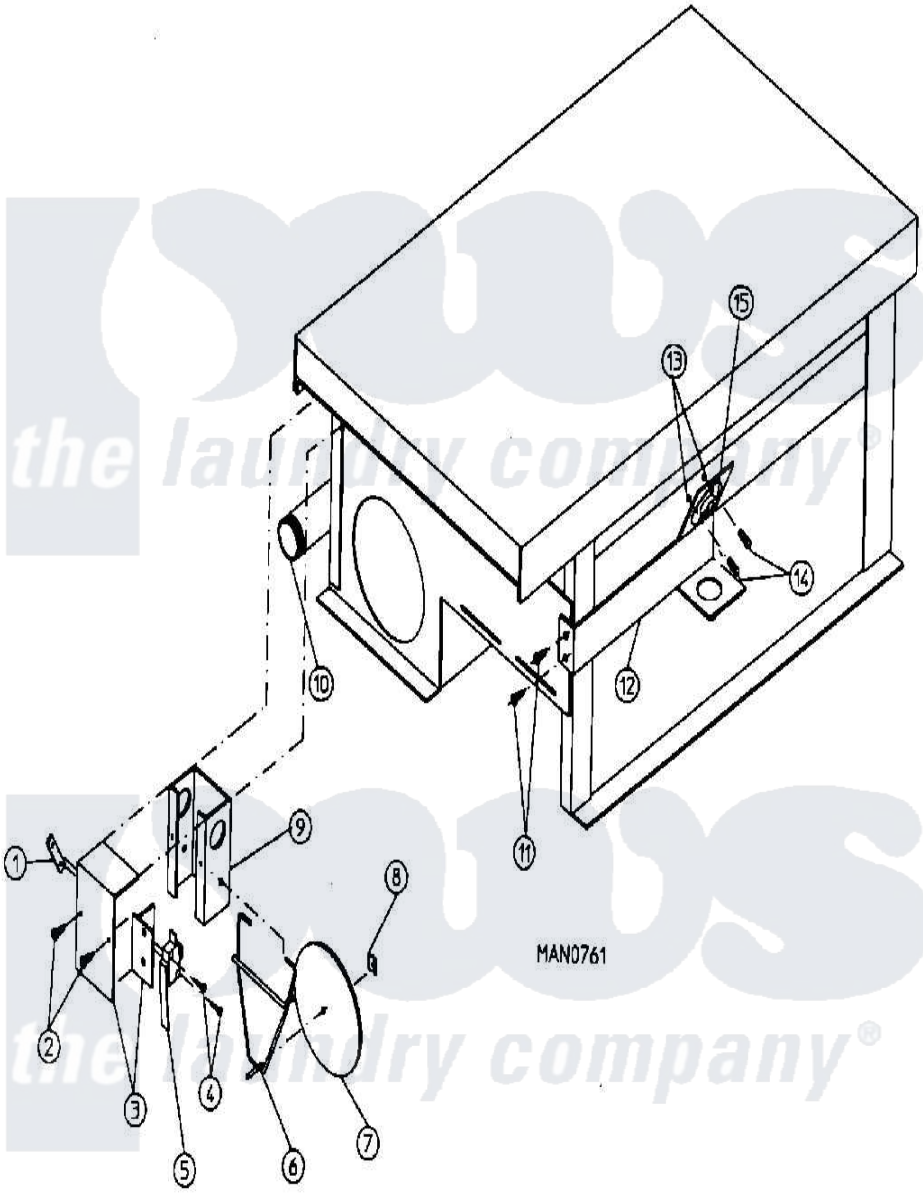

Maytag Residential Maytag MDG30PC3AL Dryer Parts Parts Diagram 17 - SAIL SWITCH/HI-LIMIT ASSEMBLY
Click on the part number to view part

Item	Original Part Number	Replaced By	Status	Part Description
000	W10124350		Not Available	ORDER PARTS FROM AMERICAN DRYER CORP AT 508-678-9000
001	A154004	154004		Tinnerman
002	A150309	W10146761		10-16 X 1
003	A802799	802799		Sail Sw.bo
004	A150303	150303		4 X 3 4 P
005	A122200	122200		Sail Switch
006	A105500	W10146641		Std Sail S
007	A319202	W10146866		Sail Switch
008	A154002	154002		1 8 Push O
009	A802800	802800		Sail Switch
"	A802801	802801		Sail Switch
010	A142809	W10146757		1 2 X 29 1
011	A150309	W10146761		10-16 X 1
012	A319704	WB4X122		Medallion
013	A151000	WH12X195		Switch Assembly

014	A151001	W10146764		8-32 Pal N
015	A130201		Not Available	HI-LIMIT (330 DEG.)
016	A143000			1 2 X 3 4

the laundry company®
the laundry company®
the laundry company®