Maytag MDG8400AWQ 09 - WIRING INFORMATION

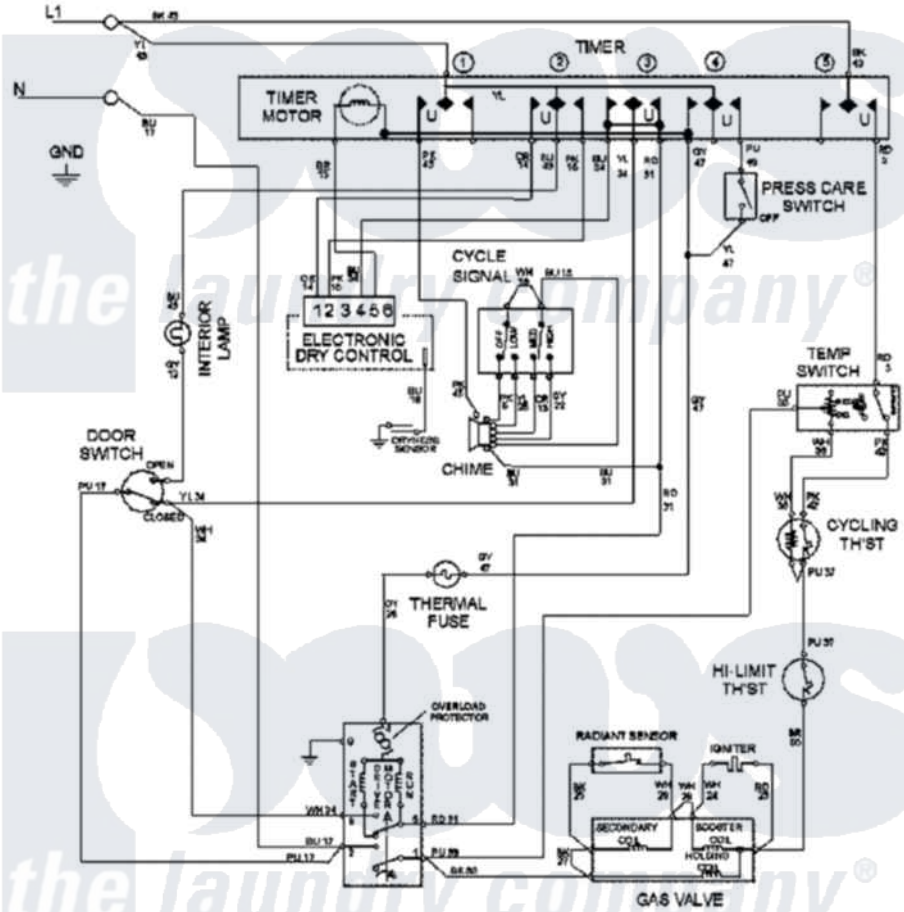

Maytag Residential Maytag MDG8400AWQ Dryer Parts Parts Diagram 09 - WIRING INFORMATION
Click on the part number to view part

Item	Original Part Number	Replaced By	Status	Part Description
1	15003280		Not Available	WIRING INFORMATION (GAS)