Maytag MDG8757AWQ 01 - CABINET

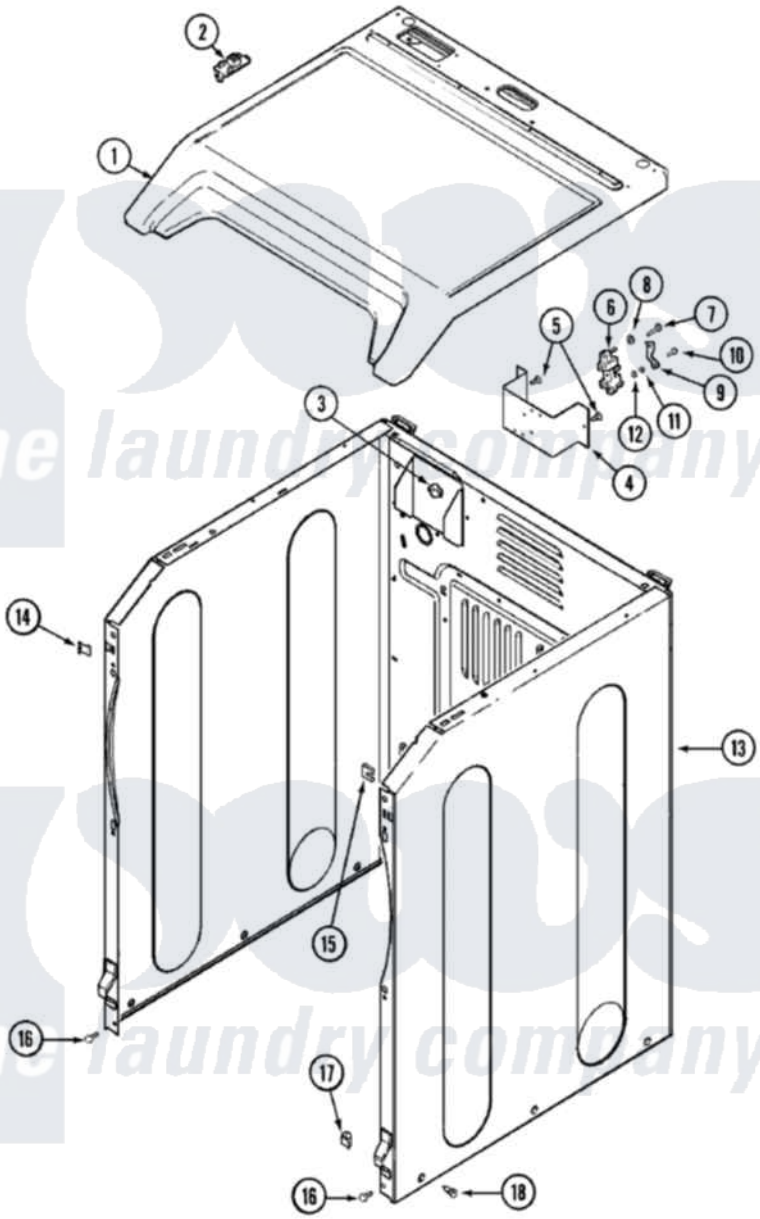

Maytag Residential Maytag MDG8757AWQ Dryer Parts Parts Diagram 01 - CABINET
Click on the part number to view part

Item	Original Part Number	Replaced By	Status	Part Description
1	33002628			Cover, Top
2	33001872	33002891		Pin, Locator
3	22003298			Retainer, Wire
4	33001826		Not Available	BRACKET, TERMINAL BLOCK----NA
5	22001995			Screw Note: Screw, Tumbler Front And Shroud
6	33001244			Block, Terminal
7	Y312209	W10001200		Screw
8	Y311270			Washer, Terminal Block
9	Y312184			Strap, Grounding
10	33001245			Screw----NA
11	311484	112432		Nut
12	311093			Washer, Terminal Connection
13	22003640			Cabinet Assembly
14	22002049			Clip Note: Clip, Front Panel
15	213280	204439		Screw And Fstner Assembly

16	22001995		Screw Note: Screw, Tumbler Front And Shroud
17	22003298		Retainer, Wire
18	22003409	213007	Xfor Cabinet See Cabinet, Back

the laundry company®

the laundry company®

the laundry company®