Maytag MEDB750YW1 03 - BULKHEAD PARTS

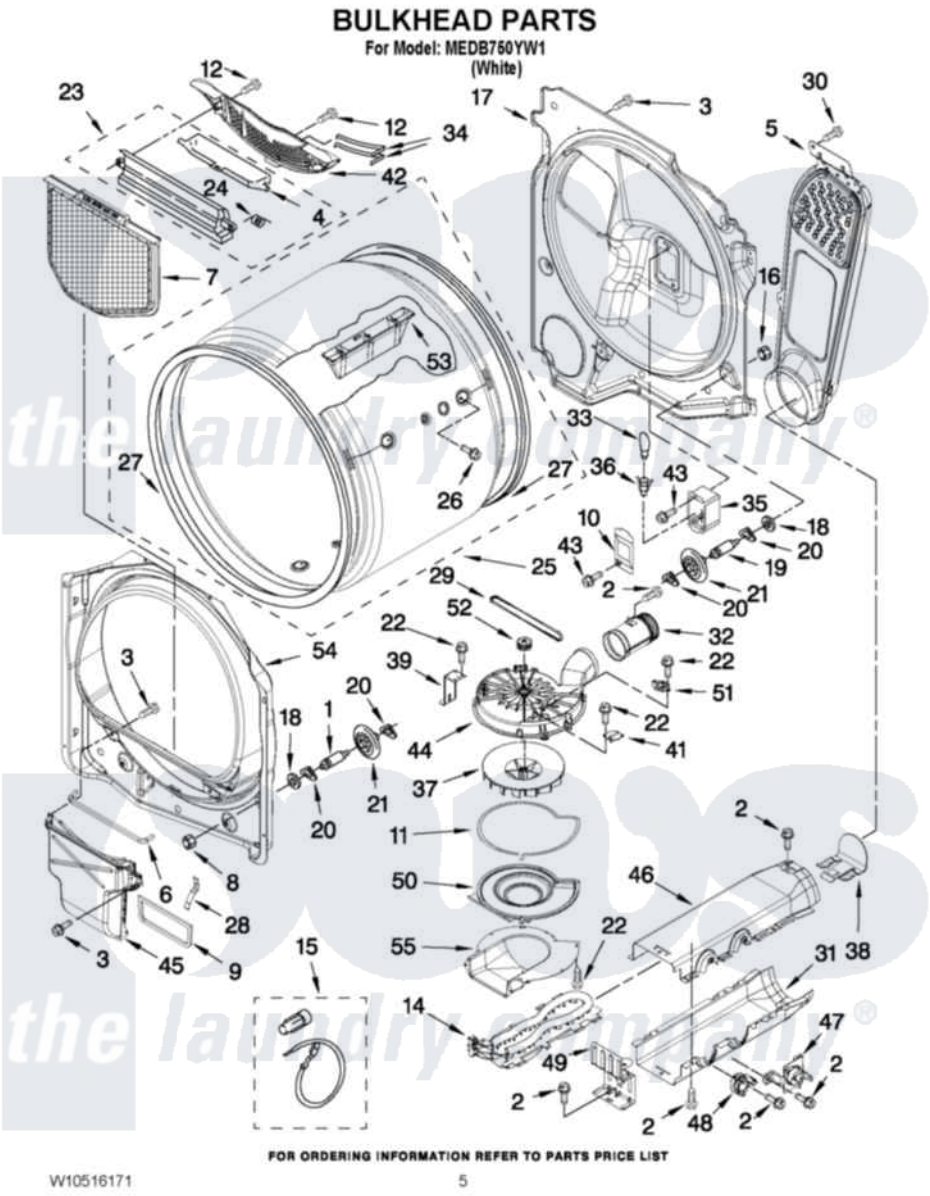

Maytag Residential Maytag MEDB750YW1 Dryer Parts Parts Diagram 03 - BULKHEAD PARTS
Click on the part number to view part

Item	Original Part Number	Replaced By	Status	Part Description
1	W10359271			Shaft, Drum Roller Threads
2	90767			Screw, 8A X 3/8 HeX Washer Head Tapping
3	3390631			Screw, 10-16 X 3/8
4	3394984	8563758		Door, Lint Screen
5	8544730			Air Duct Assembly
6	697813			Seal, Outlet Housing
7	W10049370	W10120998		Screen
8	3934666	W10080210		Nut, 3/8 X 16
9	8544721			Seal, Lint Duct
10	3402841	8532165		Lens, Drum Light
11	8573068			Seal, Blower Cover
12	3387230			Screw, 10-16 X 13/16
14	8544771			Heater Element
15	279457			Wire Kit, Terminal
16	W10001120	W10080190		Nut, 3/8-16
17	8557234			Bulkhead, Rear

18	3387459	W10080960	Washer, Support
19	W10359272		Shaft, Roller Drum Threads
20	690997		Washer, Thrust
21	W10314171		Roller, Support Assembly
22	3350424		Screw, 10-16 X 1/2
23	3394985	8563755	Housing, Outlet Assembly
24	3394986		Spring, Lint Screen Door
25	8557269	8557271	Drum
26	W10219342		Screw, Baffle Mounting
27	W10116344	280140	Seal
28	8573070		Clip, Lint Duct
29	8544742		Belt, Blower
30	693995		Screw, Hex Head
31	8544770		Housing Slot, Heater Box
32	8544755		Exhaust Pipe
33	3406124	22002263	Lamp
34	3387223		Electrode, Sensor
35	3977373		Bracket, Drum Light
36	W10214261		Socket, Drum Light Assembly
37	8544737		Wheel, Blower
38	8544776		Flange, Heater Box
39	8544741		Screw, 11-16 X 3/4 Lint Screen
41	3390719		Thermal-Fuse
42	8544723		Grille Outlet
43	3390647	488729	Screw
44	W10256512		Housing, Blower
45	8544786		Lint Duct Assembly
46	8544769		Housing, Blower Lint Duct Assembly
47	280148		Thermal Cut-Off, Kit
48	8557403		Thermostat 295 F
49	8544729		Bracket, Heater Box
50	8544719		Cover, Blower
51	8577274		Thermostat 295F
52	8544739		Pulley, Blower
53	8563860		Baffle, Drum
54	8557244		Bulkhead, Front
55	8544718		Duct, Inlet Blower

the laundry company®