Maytag MFR18PDAVS 11 - DOOR

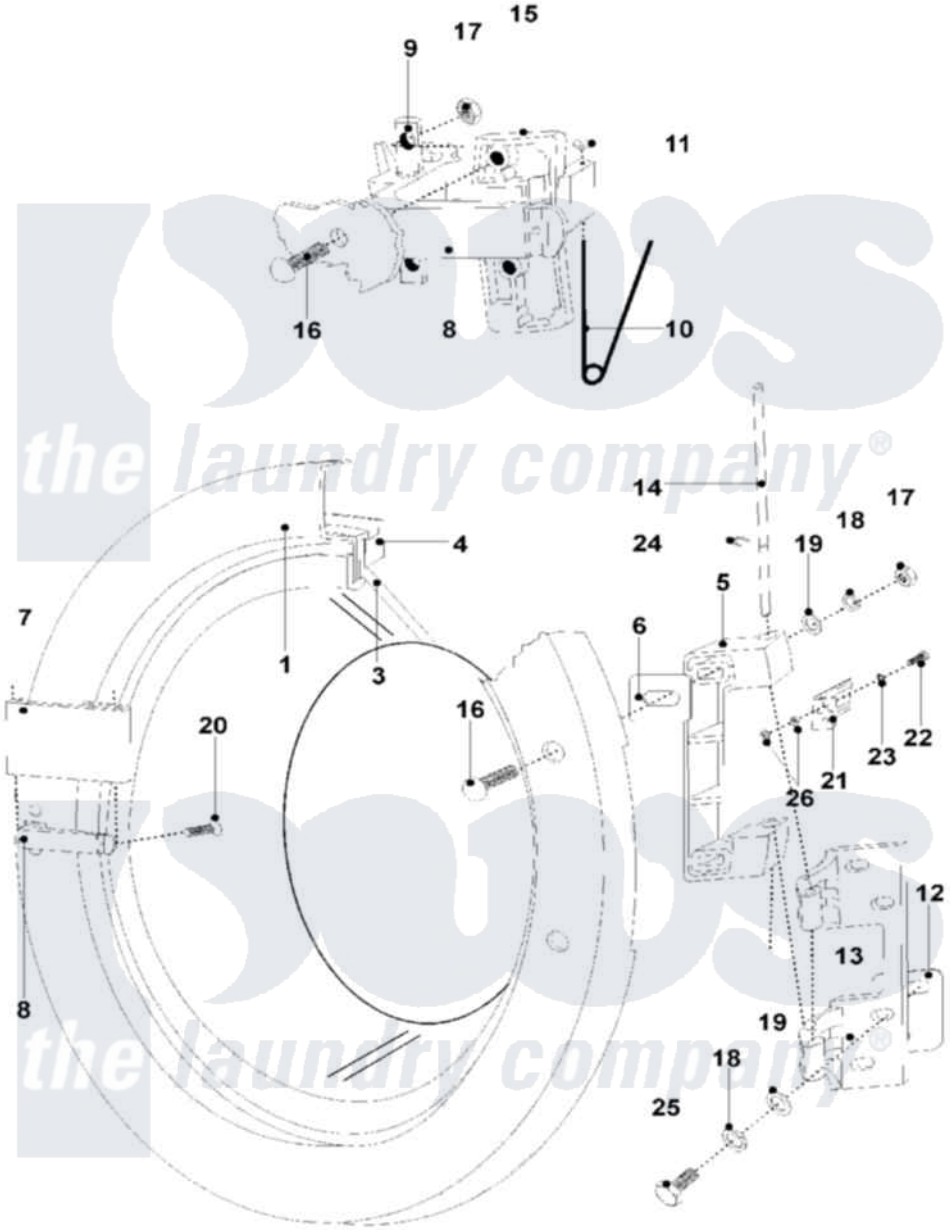

Maytag Residential Maytag MFR18PDAVS Washer Parts Parts Diagram 11 - DOOR
Click on the part number to view part

Item	Original Part Number	Replaced By	Status	Part Description
001	23001363			Ring, Door
003	23001364			Glass, Door
004	23001365			Rubber, Door Glass
005	23001366			Plate, Hinge
006	23001166			Shim, Hinge Plate
007	23003700	12001889		Kit, Door HAndle Assembly HAndle Front And Back Included
008	23003633			Lever, Door
009	23001168			Door Handle Pivot Pin
010	23001169			Spring, Handle Lever
011	23002499			Spring Retaining Clip
012	23001368			Shim, Hinge Base
013	23001369			Pin, Door Lock
014	23001172			Shaft, Door Hinge
015	23001370			Door Handle Block W/Pin
016	23001175			Screw

017	23002280		Nut M6
018	23002130	23001158	Lockwasher
019	23002424		Washer M6.4
021	23001373		Microswitch, Activating Plate
022	23001781	23001179	Screw
023	23002111	23001013	Lock Washer External Teeth M4
024	23001181		Ring, Retaining
025	23002279	23002462	Screw Lu
026	23003794		Washer

the laundry company®
the laundry company®
the laundry company®