Maytag MFR25MCAVS 02 - CONTROL PANEL-MC (SERIES 10)

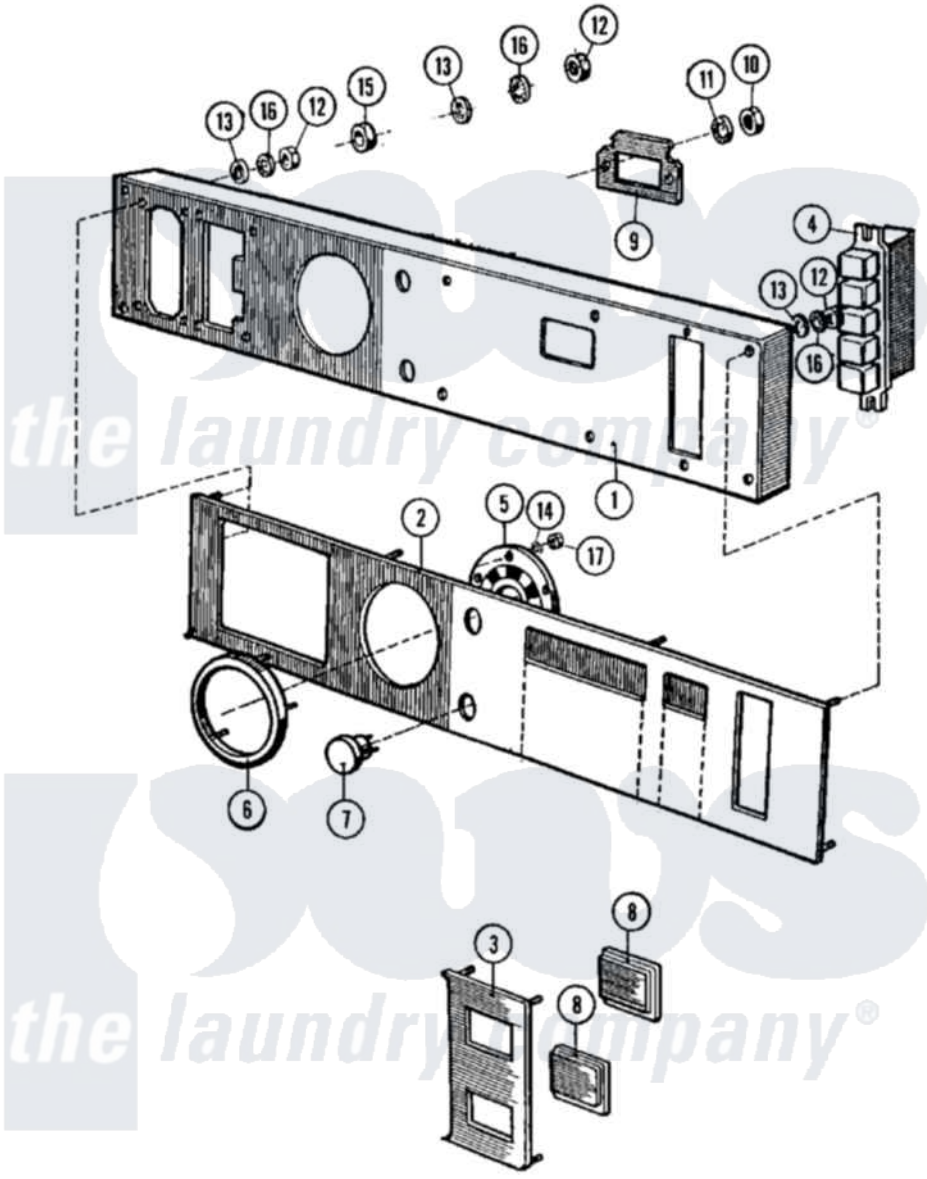

Maytag Residential Maytag MFR25MCAVS Washer Parts Parts Diagram 02 - CONTROL PANEL-MC (SERIES 10)
Click on the part number to view part

Item	Original Part Number	Replaced By	Status	Part Description
001	NLA		Not Available	PLATE, BACK-UP (COIN METER)
002	NLA		Not Available	PANEL, CONTROL
003	23001041	23002524		Plate- Ind
004	23001042			Switch, Program Selector
005	23001043	23002494		Disc- Indi
006	23001044	23002496		Disk- Indi
007	23001046			Lamp, Indicator
008	23001049		Not Available	LENS, TRANSPARENT RED
"	NLA		Not Available	LENS, ALUMINIUM
009	NLA		Not Available	PLATE, MOUNTING
010	23001053			Nut
011	23001054			Washer, Locking
012	23001055	23001014		Nut M4
013	23001056			Ring, Shaft Locking
014	23001057	23002499		Spring Retaining Clip
015	23001058			Tube, Distance

016	NLA	Not Available	LOCKWASHER (M4)
017	23002325		Washer
018	23001038		Conversion Kit
"	23002334		Mc To MN Convers.