# Maytag MFR25PCAVS 11 - BASE FRAME (SERIES 10)

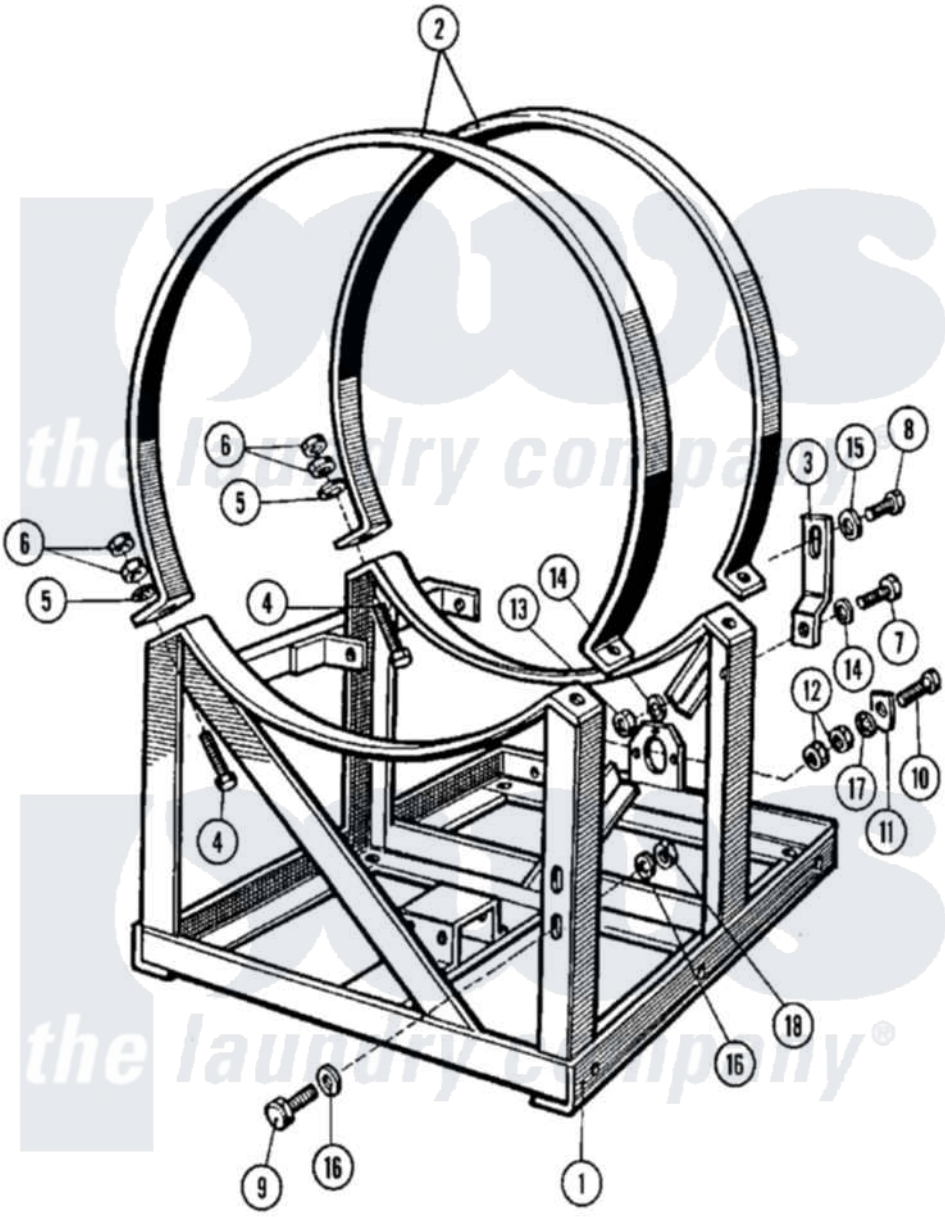


Maytag Residential Maytag MFR25PCAVS Washer Parts Parts Diagram 11 - BASE FRAME (SERIES 10)
Click on the part number to view part

| Item | Original Part Number | Replaced By | Status | Part Description |
|---|---|---|---|---|
| 001 | NLA | | Not Available | FRAME |
| 002 | NLA | | Not Available | CLAMP, TUB |
| 003 | NLA | | Not Available | BRACE, TUB SUPPORT |
| 004 | 23001425 | 23003285 | | Bolt |
| 005 | 23001400 | | | Lock Washer, Spring |
| 006 | 23001240 | 23001661 | | Nut M10 |
| 007 | 23001304 | 23003765 | | Bolt M8x35 |
| 008 | 23001205 | | | Bolt |
| 009 | 23001307 | 23002462 | | Screw Lu |
| 010 | 23001311 | 23002806 | | Screw |
| 011 | 23001308 | | | Hardware, Grounding |
| 012 | 23001312 | | | Mut M6 |
| 013 | 23001266 | | | Nut M8 |
| 014 | 23001265 | | | Washer |
| 015 | NLA | | Not Available | WASHER (DIA. 30 X 8.5 X 2.5) |
| 016 | 23001309 | | | Washer Lu |

| | | | |
|---|---|---|---|
| 017 | 23001028 | 23002756 | Lockwasher |
| 018 | 23001310 | | Nut, Self Locking |
| 019 | 23001313 | 23003767 | Washer Brass |

the laundry company®

the laundry company®

the laundry company®