Maytag MFR40PDCTS 08 - COIN VAULT (PD)

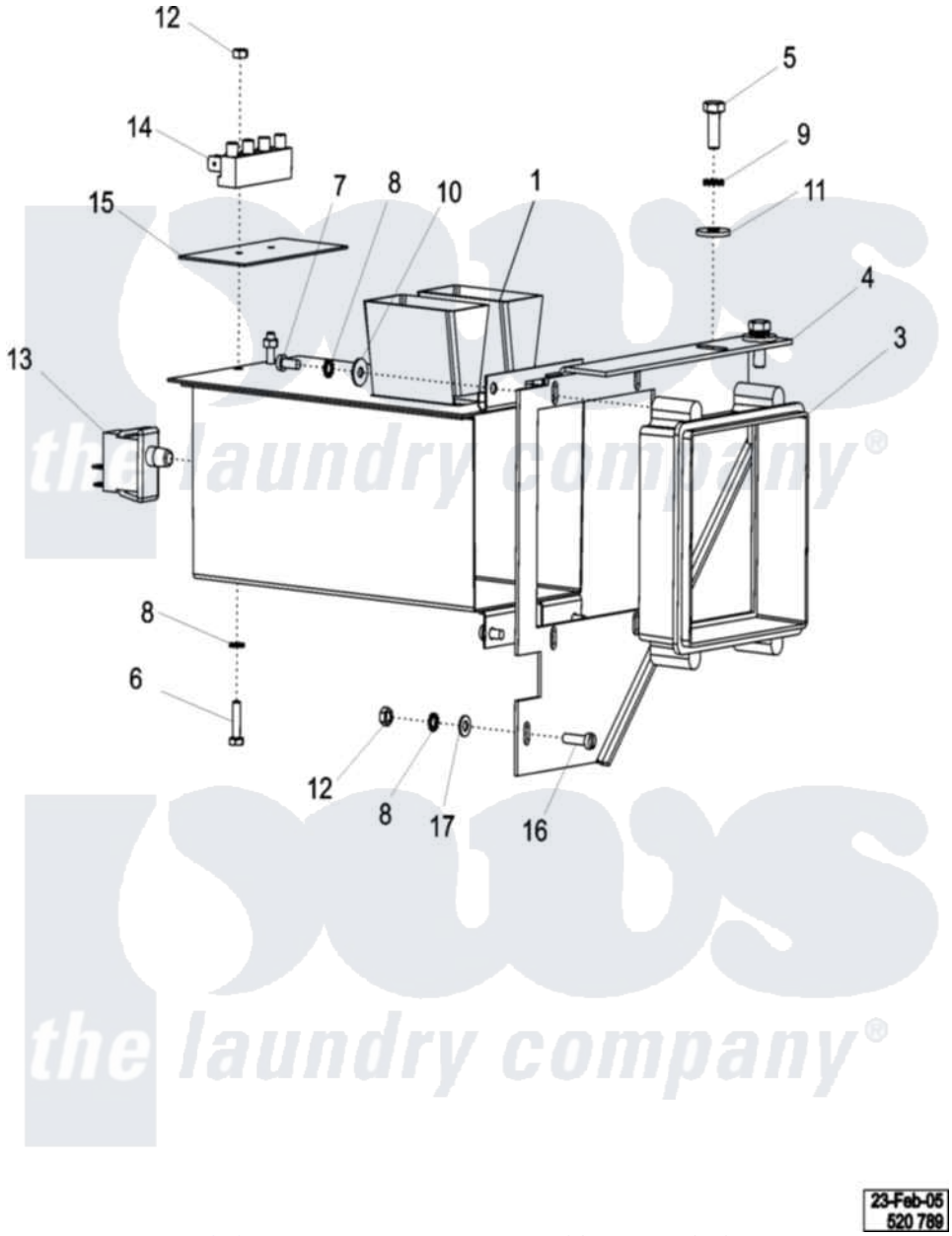

Maytag Residential Maytag MFR40PDCTS Washer Parts Parts Diagram 08 - COIN VAULT (PD)
Click on the part number to view part

Item	Original Part Number	Replaced By	Status	Part Description
001	23004128			Coinbox Vault
003	23004129			Coinbox Frame
004	23004130			Coinbox Bracket
005	23002461			Screw
006	23004095			Bolt M4x16
007	23002423	23001361		Bolt
008	23002950			Lock Washer M4
009	23002756			Lockwasher
010	23002504			Washer M4
011	23003012			Washer Lu
012	23003666	23001014		Nut M4
013	23003656			Switch, Coin Box
014	23001113			Housing, Connector
015	23001115			Terminal Block Insulation
016	23001012			Screw
017	23002438			Washer M4.3