Maytag MFR50MCATS 25 - DOOR (SERIES 11)

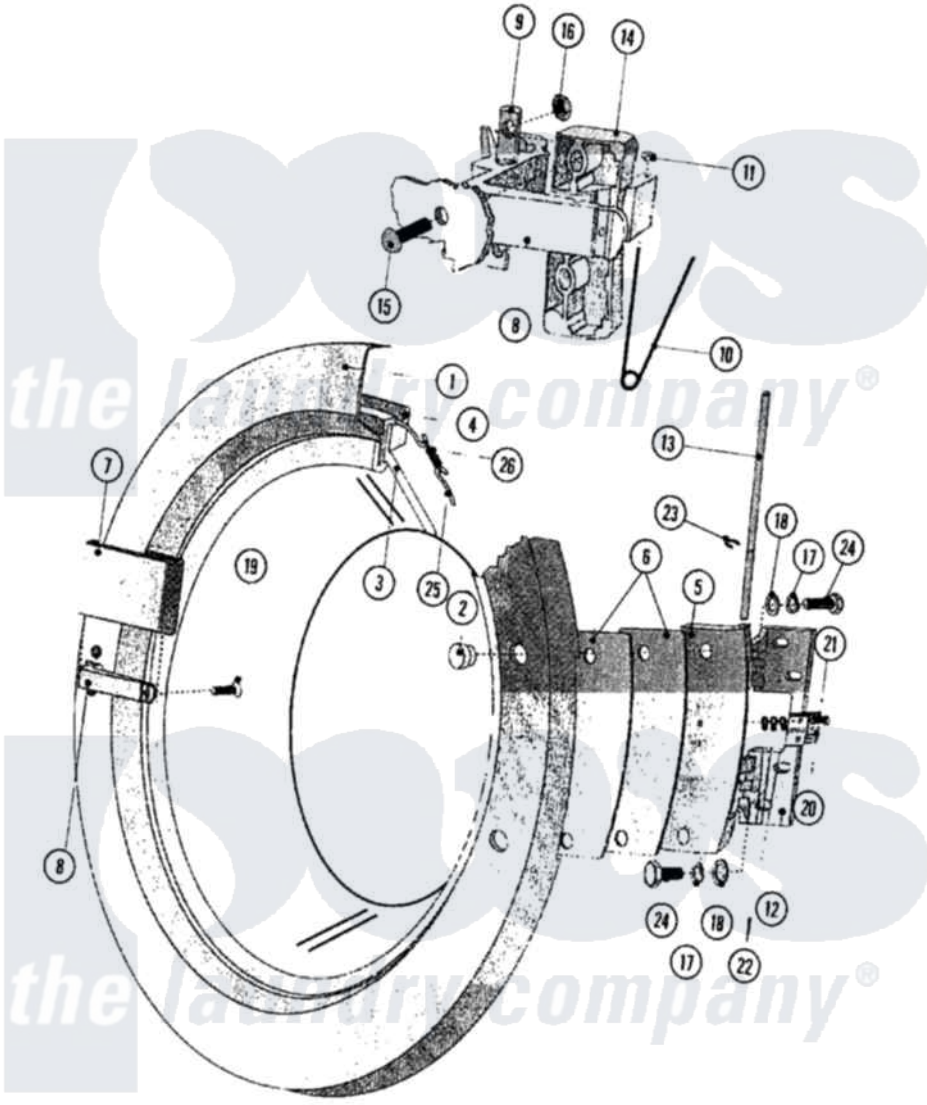

Maytag Residential Maytag MFR50MCATS Washer Parts Parts Diagram 25 - DOOR (SERIES 11)
Click on the part number to view part

Item	Original Part Number	Replaced By	Status	Part Description
001	23001161			Ring, Door
002	23001162			Nut, Ornamental
003	23001163			Glass, Door
004	23001164			Gasket, Door Glass
005	23001165			Plate, Hinge
006	23001166			Shim, Hinge Plate
007	12001889			Kit, Door HAndle Assembly HAndle Front And Back Included
"	23001510	12001889		Kit, Door HAndle Assembly HAndle Front And Back Included
008	23003634			Lever, Door
"	NLA		Not Available	LEVER, HANDLE
009	23001168			Door Handle Pivot Pin
010	23001169			Spring, Handle Lever
011	23001057	23002499		Spring Retaining Clip
012	23001171			Base, Hinge

013	23001172		Shaft, Door Hinge
014	23001173		Handle, Lever Plate
015	23002937		Screw
016	23001176	23001312	Mut M6
"	23002280		Nut M6
017	23002130	23001158	Lockwasher
018	23001643	23002424	Washer M6.4
019	23001177		Screw
"	23002617	23001777	Screw, Drive
020	23001178		Microswitch, Activating Plate
021	23001178		Microswitch, Activating Plate
022	23001781	23001179	Screw
023	23001708		Washer
024	23001181		Ring, Retaining
025	23002279	23002462	Screw Lu
026	23002279	23002462	Screw Lu
027	23001185		Doorseal, Tension Ring
028	23001186		Doorspring, Tension Spring

the laundry company®
the laundry company®