Maytag MFR50PNBVS 09 - MOTOR & BASKET PULLEY

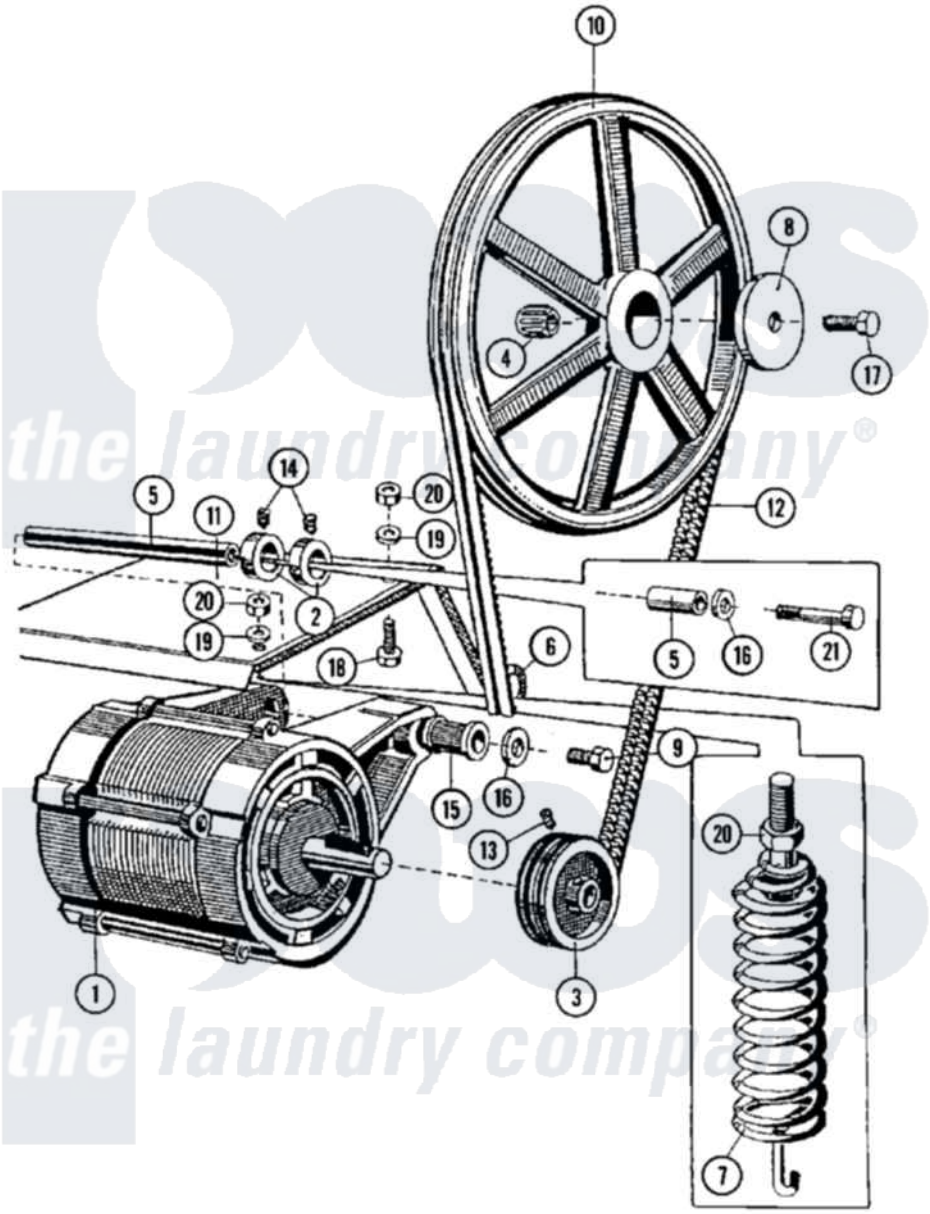

Maytag Residential Maytag MFR50PNBVS Washer Parts Parts Diagram 09 - MOTOR & BASKET PULLEY
Click on the part number to view part

Item	Original Part Number	Replaced By	Status	Part Description
001	23001271			Motor
"	23002317			Switch, Centrifugal
002	23001272			Collar, Retainer
003	23001273			V-Pulley
004	23001274			Ring, Tolerance
005	23001275			Rod, Motor Support
006	23001278			Tensioner, Belt
007	23001279			Belt, Tension Spring
008	23001281			Washer
009	23001283			Bolt
010	23001285			Pulley, Basket
011	23001286			Shield, Motor
012	23001287			V-Belt
013	23001289			Screw, Allen Set
014	23001290			Screw, Allen Set
015	23001291			Bushing, Rubber Motor Mount

016	23001292		Washer
017	23001293	23002931	Screw
018	23001264		Bolt M8x20
019	23001265		Washer
020	23001266		Nut M8
021	23001294		Bolt

the laundry company®

the laundry company®

the laundry company®