Maytag MFW9700SB1 04 - DISPENSER PARTS

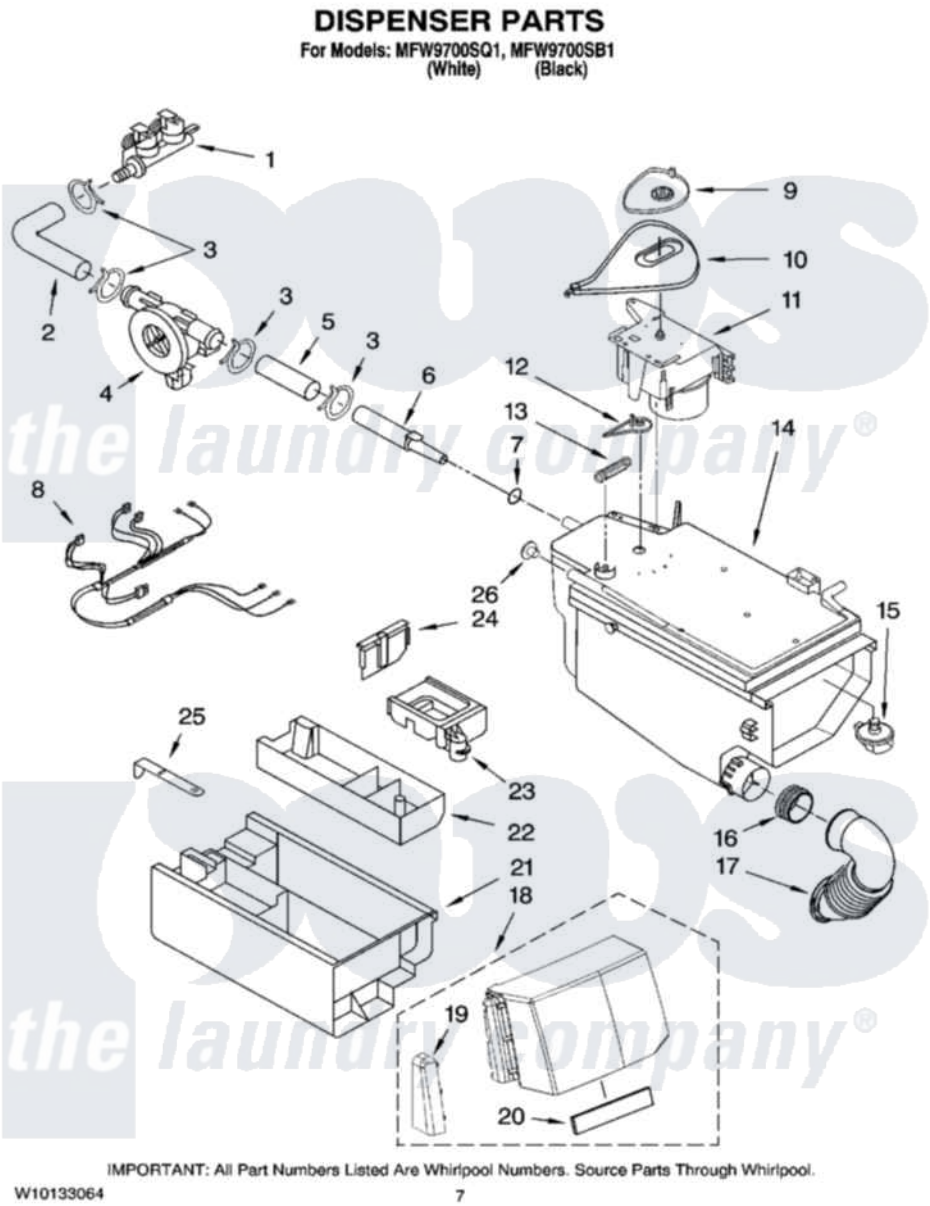

Maytag Residential Maytag MFW9700SB1 Washer Parts Parts Diagram 04 - DISPENSER PARTS
Click on the part number to view part

Item	Original Part Number	Replaced By	Status	Part Description
1	8182862			Valve, Inlet
2	8181710			Hose, Inlet Valve To Vent Pipe
3	8181751	489503		Clamp
4	8181696	W10110225		Flowmeter
5	8181708			Hose, Flowmeter
6	8183010	280194		Nozzle
7	8181714	280196		Ring-O
8	8183022			Harness, Wiring
9	8181726			Cam, Actuator
10	8181725			Lever, Water Distribution
11	8181723			Actuator
12	8181724			Connection, Lever
13	8181727			Spring, Lever
14	8183032	280198		Dispenser
"	8183033	280197		Dispenser
15	8181712			Nozzle, Distribution

16	8181747	Seal
17	8181718	Tube, Dispenser To Bellow
18	8183057	Handle, Drawer
"	8183072	Handle, Drawer
19	8182599	Endcap, Left
"	8183073	Endcap, Left
20	8182173	Cushion, Handle
21	8181720	Drawer, Detergent
"	8182160	Drawer, Detergent
22	8181722	Container, Detergent
"	8182184	Container, Detergent
23	8182665	Siphon, Bleach/Softener
"	8182161	Siphon, Bleach/Softener
24	8181730	Separator
"	8182162	Separator
25	8181721	Hook, Drawer
26	8182123	Led, Pcb

the laundry company®
the laundry company®
the laundry company®