Maytag MFX75PNAVS 12 - WATER VALVE ASSEMBLY

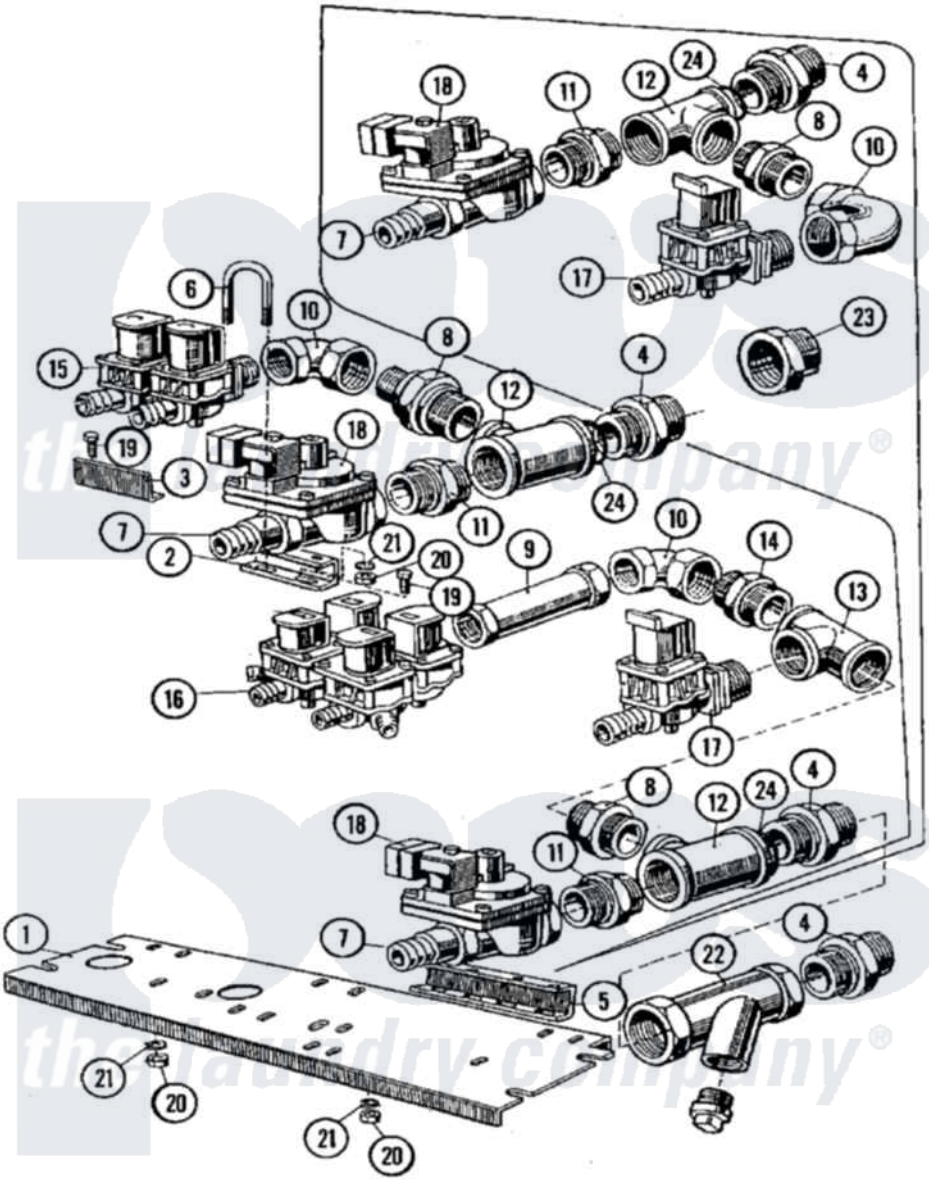

Maytag Residential Maytag MFX75PNAVS Washer Parts Parts Diagram 12 - WATER VALVE ASSEMBLY
Click on the part number to view part

Item	Original Part Number	Replaced By	Status	Part Description
001	23002059			Support, Inlet Valve
002	23002060			Holder, Inlet Valve
003	23002061			Bracket
004	23002068			Adapter
005	23002063			Holder, Inlet Valve
006	23002064			Hook, Mounting
007	23002045			Coupling, Pipe
008	23002065			Adapter, Reduce
009	23002066			Tube, Extension
010	23001756			Elbow
011	23002068			Adapter
012	23002069			T-Part
013	23001485			Tee, 3/4" Pipe Thread
014	23001482			Connection
015	23002070			Valve, Inlet
016	23001755			Valve, Inlet

"	24001121			Kit, Valve Repair
017	23002071			Valve, Inlet
"	23003693			Diaphragm, Valve
"	23003694			Coil, Valve
018	23002072	23002762		Valve
"	23003693			Diaphragm, Valve
"	23003694			Coil, Valve
019	23001026			Bolt
020	23001034		Not Available	NUT (M6)
021	23001027			Washer
022	23002156			Filter
023	NLA		Not Available	ADAPTER
024	NLA		Not Available	WASHER

the laundry company®
the laundry company®
the laundry company®