Maytag MGD7000XR1 01 - TOP AND CONSOLE PARTS

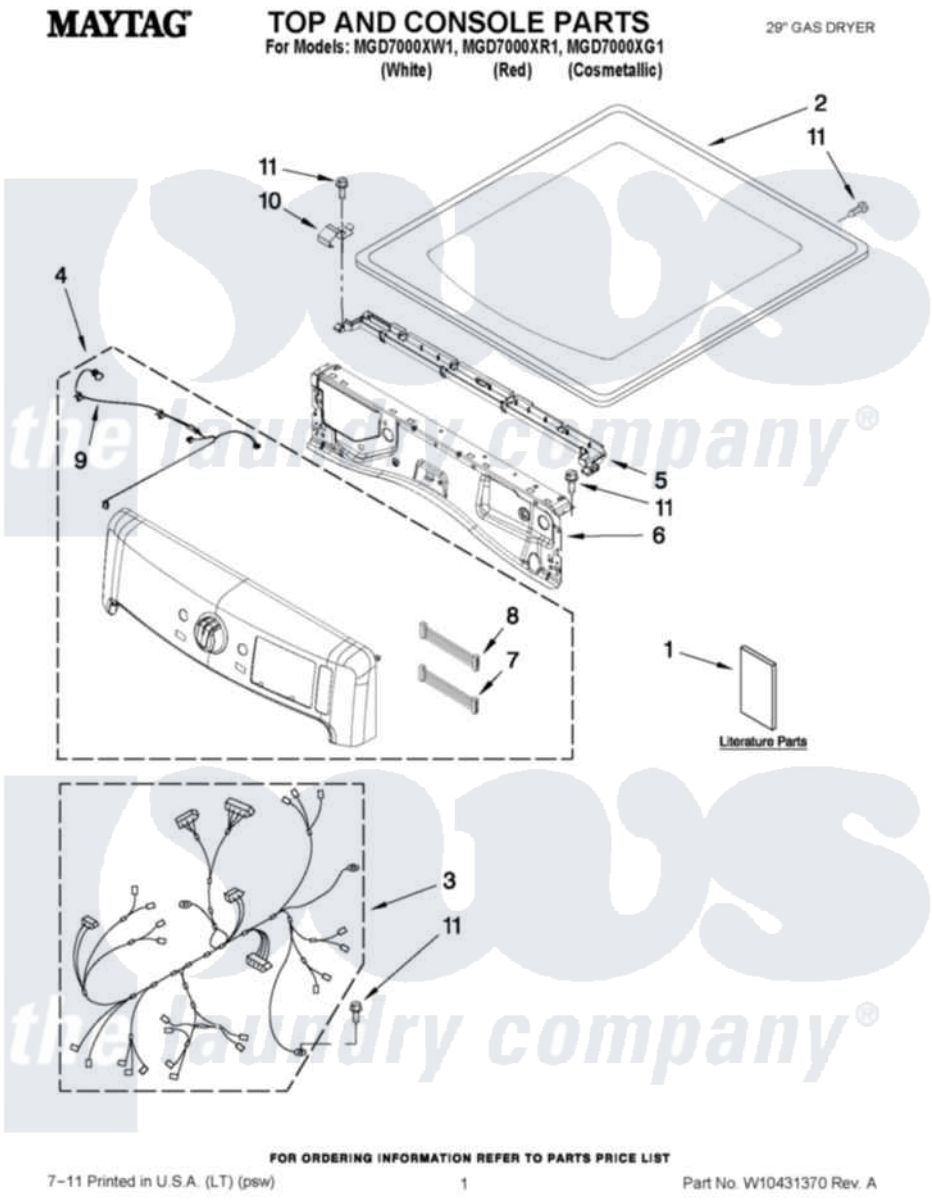

Maytag Residential Maytag MGD7000XR1 Dryer Parts Parts Diagram 01 - TOP AND CONSOLE PARTS
Click on the part number to view part

Item	Original Part Number	Replaced By	Status	Part Description
1	W10312954		Not Available	USE & CARE GUIDE
"	W10423115		Not Available	INSTALLATION, INSTRUCTION
"	W10316958		Not Available	TECH SHEET
2	W10208383			Top
"	W10337792			Top
"	W10301057			Top
3	W10355891			Harness, Main
4	W10350669			Panel, Console
"	W10350671			Panel, Console
"	W10350673	W10388467		Console
5	W10317570			Water Channel
6	W10208198			Bracket, Console
7	W10309986			Cable, Jumper
8	W10309987			Cable, Jumper
9	W10267833			Cable, Led User-Interface
10	W10317566			Spring, Clip Water Channel

11	3390647	488729	Screw