Maytag MGDB950YW0 01 - TOP AND CONSOLE PARTS

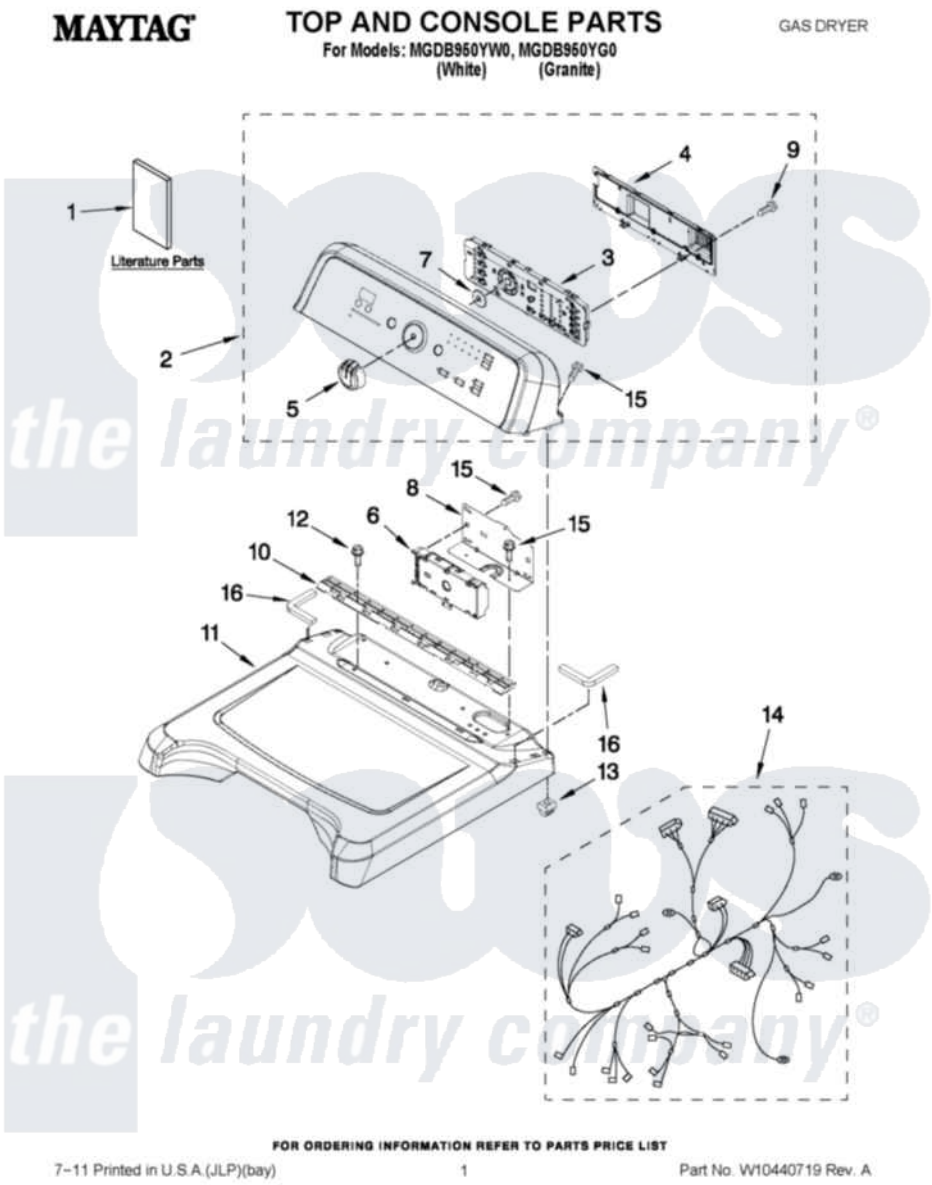

Maytag Residential Maytag MGDB950YW0 Dryer Parts Parts Diagram 01 - TOP AND CONSOLE PARTS
Click on the part number to view part

Item	Original Part Number	Replaced By	Status	Part Description
1	W10393006		Not Available	TECH, SHEET
"	W10388780		Not Available	GUIDE, USE & CARE
"	W10392126		Not Available	INSTALLATION INSTRUCTION (ENGLISH)
2	W10338346			Console Assembly
"	W10338347			Console Assembly
3	W10388669			User Interface
4	W10051124			Cover, Rear
5	W10338554			Knob, Assembly
6	W10432257			Control Electronic
7	8572039			Seal, User Interface
8	8563853			Bracket, Machine Controller
9	W10003770			Screw, 6-19 X 1/2
10	8558863			Bracket, Console
11	W10223157			Top
"	W10338836			Top
12	337686		Not Available	SCREW, 8-18 X .500

13	W10112673	Screw, Grommet
14	W10393461	Harness, Wiring Main
15	W10131402	Screw, 8-18 X 1.370
16	W10219695	Foam Seal, Top
"	W10219694	Foam Seal, Top

the laundry company®

the laundry company®

the laundry company®