Maytag MGDE250XL1 03 - BULKHEAD PARTS

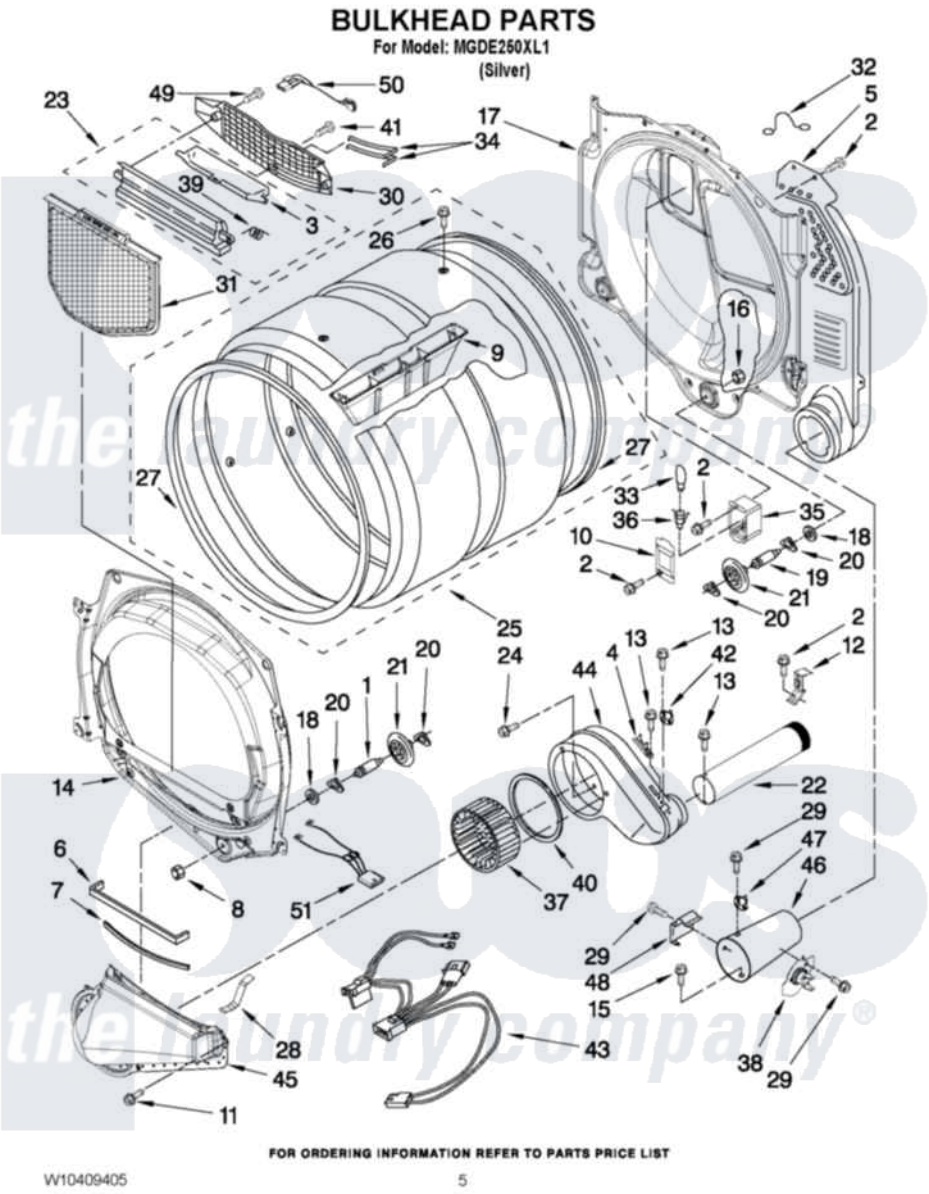

Maytag Residential Maytag MGDE250XL1 Dryer Parts Parts Diagram 03 - BULKHEAD PARTS
Click on the part number to view part

Item	Original Part Number	Replaced By	Status	Part Description
1	W10359271			Shaft, Drum Roller Threads
2	3390647	488729		Screw
3	W10153413			Door, Lint Screen
4	3392519			Thermal Limiter
5	W10293765			Air Duct Assembly
6	697813			Seal, Outlet Housing
7	697814	697813		Seal, Outlet Housing
8	3934666	W10080210		Nut, 3/8 X 16
9	W10153409			Baffle, Drum
10	3402841	8532165		Lens, Drum Light
11	359625	487240		Screw, For Mtg. Service Capacitor
12	8572105			Retainer, Toe Panel
13	8533971	90767		Screw, 8A X 3/8 HeX Washer Head Tapping
14	8565061			Bulkhead, Front
15	693995			Screw, Hex Head

16	W10001120	W10080190	Nut, 3/8-16
17	W10080170		Bulkhead, Rear
18	3387459	W10080960	Washer, Support
19	W10359272		Shaft, Roller Drum Threads
20	690997		Washer, Thrust
21	W10314171		Roller, Support Assembly
22	8563728		Exhaust Pipe
23	W10153423		Outlet Grille, Housing Assembly
24	489463		Screw, 8-18 X 1/16
25	W10153420		Complete Drum Assembly
26	W10219342		Screw, Baffle Mounting
27	W10166807	280114	Seal
28	W10345456	8066208	Clip-Exhaust
29	90767		Screw, 8A X 3/8 HeX Washer Head Tapping
30	W10153412		Grille, Outlet
31	W10049370	W10120998	Screen
32	3401707		Jumper, Tco-High Limit
33	3406124	22002263	Lamp
34	3387223		Electrode, Sensor
35	8578825		Bracket, Drum Light
36	W10214261		Socket, Drum Light Assembly
37	697772		Wheel, Blower
38	8573713		Thermal-Cutoff
39	3394986		Spring, Lint Screen Door
40	697770		Seal, Cover Plate Blower Housing
41	695240	488729	Screw
42	8577274		Thermostat 295F
43	3401850		Harness-Gas
44	8544362	W10119255	Housing, Blower
45	8066168	W10128606	Duct-Lint
46	8573824		Funnel, Burner
47	3391912		Thermostat, High-Limit 255 F
48	338906		Radiant, Sensor
49	3387230		Screw, 10-16 X 13/16
50	W10110975		Harness, Sensor
51	3406653		Harness, Sensor

the laundry company®