Maytag MGDE500VW3 01 - TOP AND CONSOLE PARTS

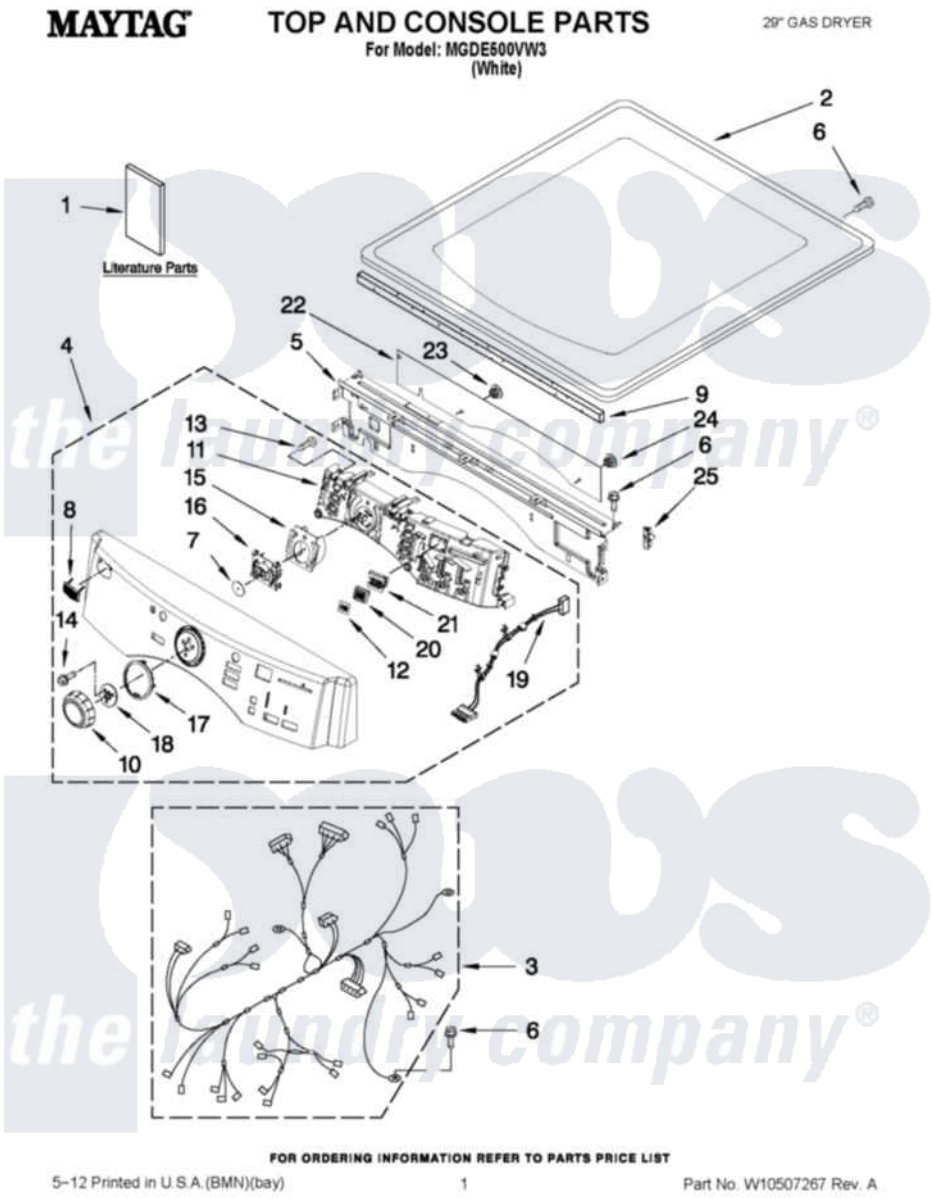

Maytag Residential Maytag MGDE500VW3 Dryer Parts Parts Diagram 01 - TOP AND CONSOLE PARTS
Click on the part number to view part

Item	Original Part Number	Replaced By	Status	Part Description
1	W10239302		Not Available	USE & CARE GUIDE
"	W10471645		Not Available	INSTALLATION, INSTRUCTION
"	W10298850		Not Available	TECH SHEET
2	3980634	W10117263		Top
3	W10111069			Harness, Main
4	W10246750			Panel, Console
5	W10215656			Bracket, Console
6	3390647	488729		Screw
7	8572039			Seal, User Interface
8	W10316087			Badge Assembly
9	W10112267			Foam-Seal Control Bracket
10	W10164576			Knob, Assembly
11	W10269025			Control-Elec
12	W10171504			Foil-Display
13	8540282	8181661		Screw, Actuator
14	8540513	8182214		Screw

15	W10170295	Frame-Light Guide
16	W10170293	Guide, Light Cycle Internal
17	W10164567	Cycle, Light Guide
18	W10172298	Bushing, Knob
19	W10242907	Harness, Communication
20	W10164578	Guide, Light
21	W10171502	Fram-Light
22	W10215674	Shield, Console Bracket
23	W10216201	Plug-Hole, 1/4"
24	W10216202	Plug-Hole, 5/16"
25	W10214555	Plug-Connector Frame

the laundry company®
the laundry company®
the laundry company®