Maytag MGDE500VW3 04 - W10293911 BURNER ASSEMBLY

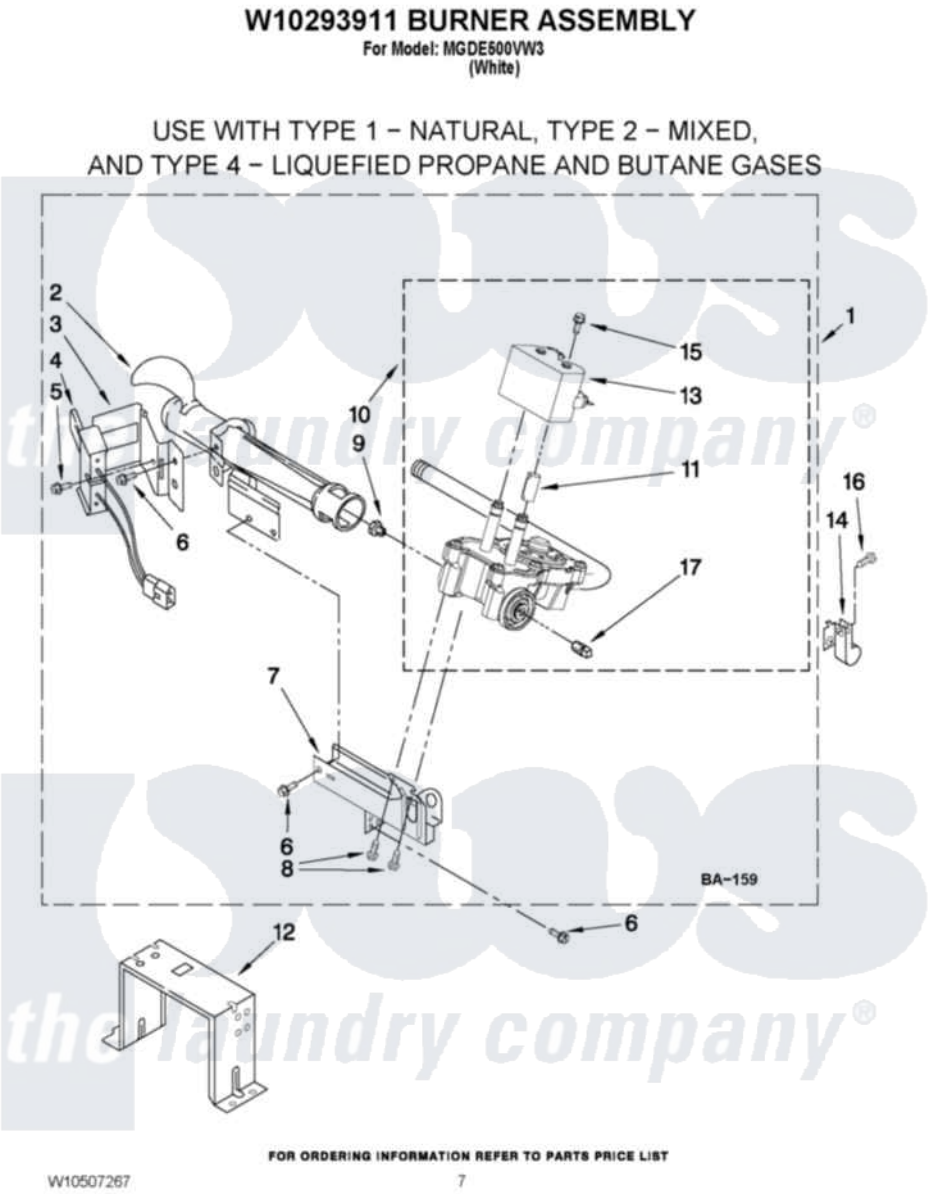

Maytag Residential Maytag MGDE500VW3 Dryer Parts Parts Diagram 04 - W10293911 BURNER ASSEMBLY
Click on the part number to view part

Item	Original Part Number	Replaced By	Status	Part Description
1	W10293911	W10310204		Burner-Gas
2	688617	693140		Burner
3	694298			Bracket, Ignitor
4	686590	279311		Ignitor
5	3393909			Screw, 8-32 X 7/8
6	343641	681414		Screw, 10AB X 1/2
7	3389871		Not Available	Base, Burner
8	3387057			Screw, 10-16 X 1/2 Orifice, Burner
9	15418			Orifice, Burner Type 1
10	W10175144	W10293912		Valve-Gas
11	W10295524	W10328463		Coil, 60 Hz
12	3389889			Bracket, Support
13	W10273784	W10328463		Coil, 60 Hz
14	3978776			Bracket, Gas Pipe Switch
15	326049536			Screw, Coil
16	3390647	488729		Screw

17	W10295523		Plug, Pipe
NI	W10293913	W10317689	Conversion Kit L.P.G. To Type Nat.

the laundry company®

the laundry company®

the laundry company®