Maytag MLE15PDAGW 04 - CABINET-FRONT (LOWER)

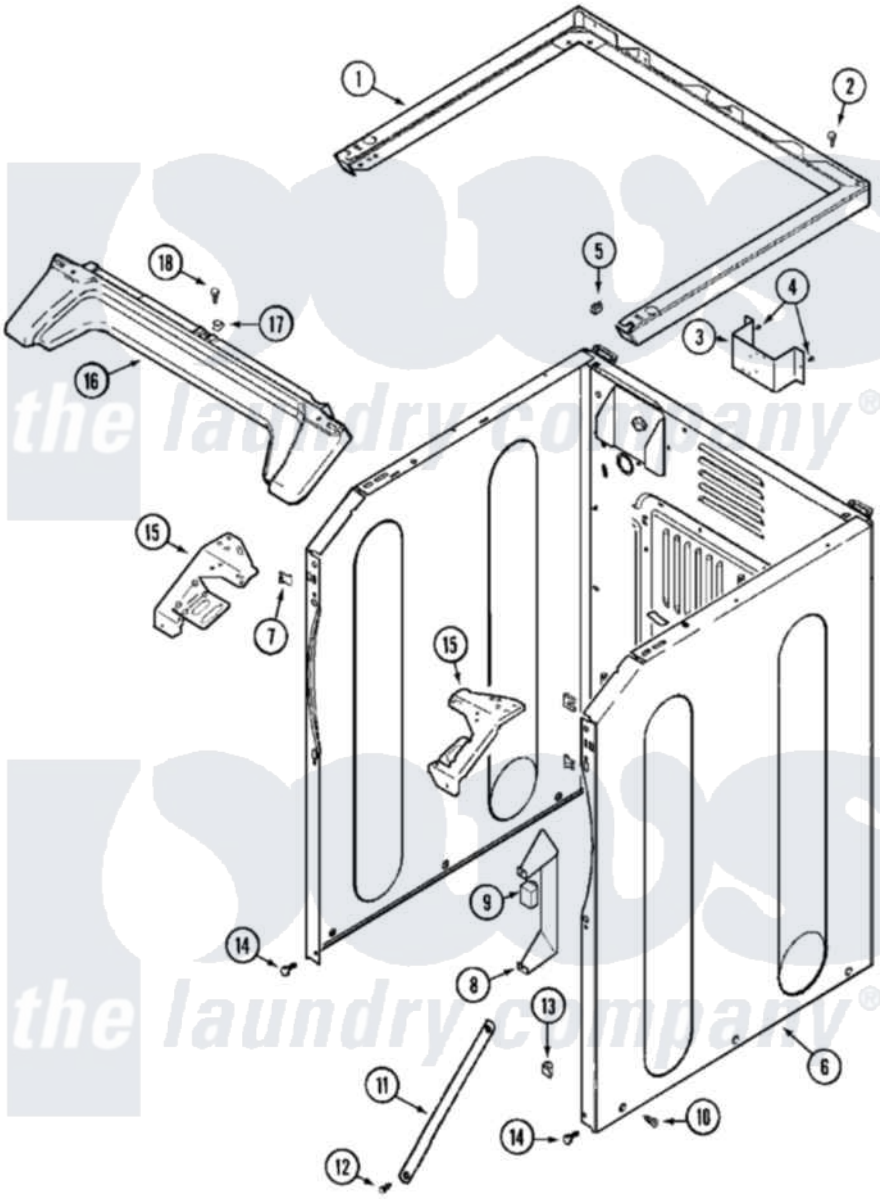

Maytag Residential Maytag MLE15PDAGW Dryer Parts Parts Diagram 04 - CABINET-FRONT (LOWER)
Click on the part number to view part

Item	Original Part Number	Replaced By	Status	Part Description
001	33002005	33002963		Support, Weld Assembly
002	22001883	214354		Screw, Top Cover To Cabnt.
003	NLA		Not Available	BRACKET, TERMINAL BLOCK----NA
004	22001995			Screw Note: Screw, Tumbler Front And Shroud
005	22001502			Fastener, U-NUt
006	NLA		Not Available	CABINET (WHT)
007	22002049			Clip Note: Clip, Front Panel
008	Y313561			Screw----NA
"	314627			Bracket, Relays
"	Y310632	1163839		Screw
009	206421			Relay, Motor Reversing
"	22001866			Screw, Relay
"	306398			Relay, Heater
"	Y251119	3177991		Screw
010	213007			Xfor Cabinet See Cabinet,

010	213007		Back
011	22002259	22002767	Brace, Cross
012	22001995		Screw Note: Screw, Tumbler Front And Shroud
013	Y310376		Clip, Door Switch Harness
014	22001995		Screw Note: Screw, Tumbler Front And Shroud
015	33002009		Bracket, Corner
"	33002010	33002473	Bracket, Corner
016	33002011		Cover, Access
017	33002013		Fastener Clip, Access Cover
018	22001995		Screw Note: Screw, Tumbler Front And Shroud
019	33002067		Wire Harness, Main
"	33002069		Wire Harness, Main
020	33001989		Retainer, Vault Switch

the laundry company®