Maytag MVWB750WR1 03 - MOTOR, BASKET AND TUB PARTS

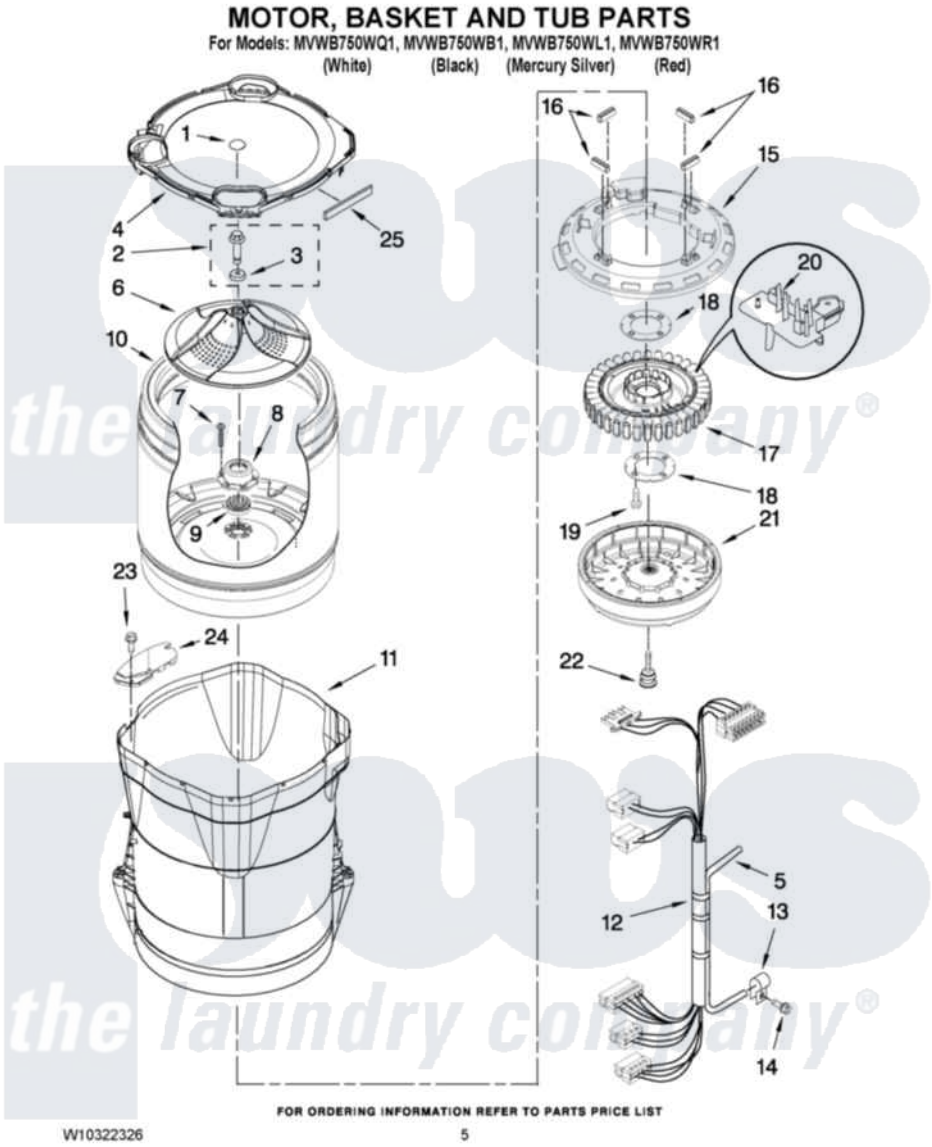

Maytag Residential Maytag MVWB750WR1 Washer Parts Parts Diagram 03 - MOTOR, BASKET AND TUB PARTS
Click on the part number to view part

Item	Original Part Number	Replaced By	Status	Part Description
1	W10149460			Cap, Impeller
2	W10076270			Screw And Washer Assembly
3	W10076260			Washer
4	W10242338			Tub Ring
5	8572540	353244		Hose, Pressure Switch
6	W10141017			Impeller
7	8533953			Screw, 8-16 X 1.000
8	W10118114	280145		Hub
9	8545953	280145		Hub
10	W10118182	W10296143		Basket
11	W10128830	W10193886		Tub-Outer
12	W10137697			Harness, Lower
13	W10005430			Clamp, Pressure Hose Retainer
14	8533957			Screw, 10-16 X 1/2
15	W10137698			Shield, Drive Motor
16	8565172	280142		Tube

17	8565170	W10419333		Stator, Motor
18	8557836			Plate, Stator
19	8534042			Screw, 1/4-20 X .968
20	W10178988			Rps Assembly
21	8565177	280146		Rotor
22	N/P		Not Available	BOLT, ROTOR ASSEMBLY NON-SERVICEABLE (SUPPLIED W/ROTOR)
23	8533928			Screw, 8-18 X 3/4
24	W10222008			Filter, Dual Pump Hood
25	W10205824			Absorber, Impact

the laundry company®
the laundry company®
the laundry company®