Maytag NED5100TQ1 02 - CABINET PARTS

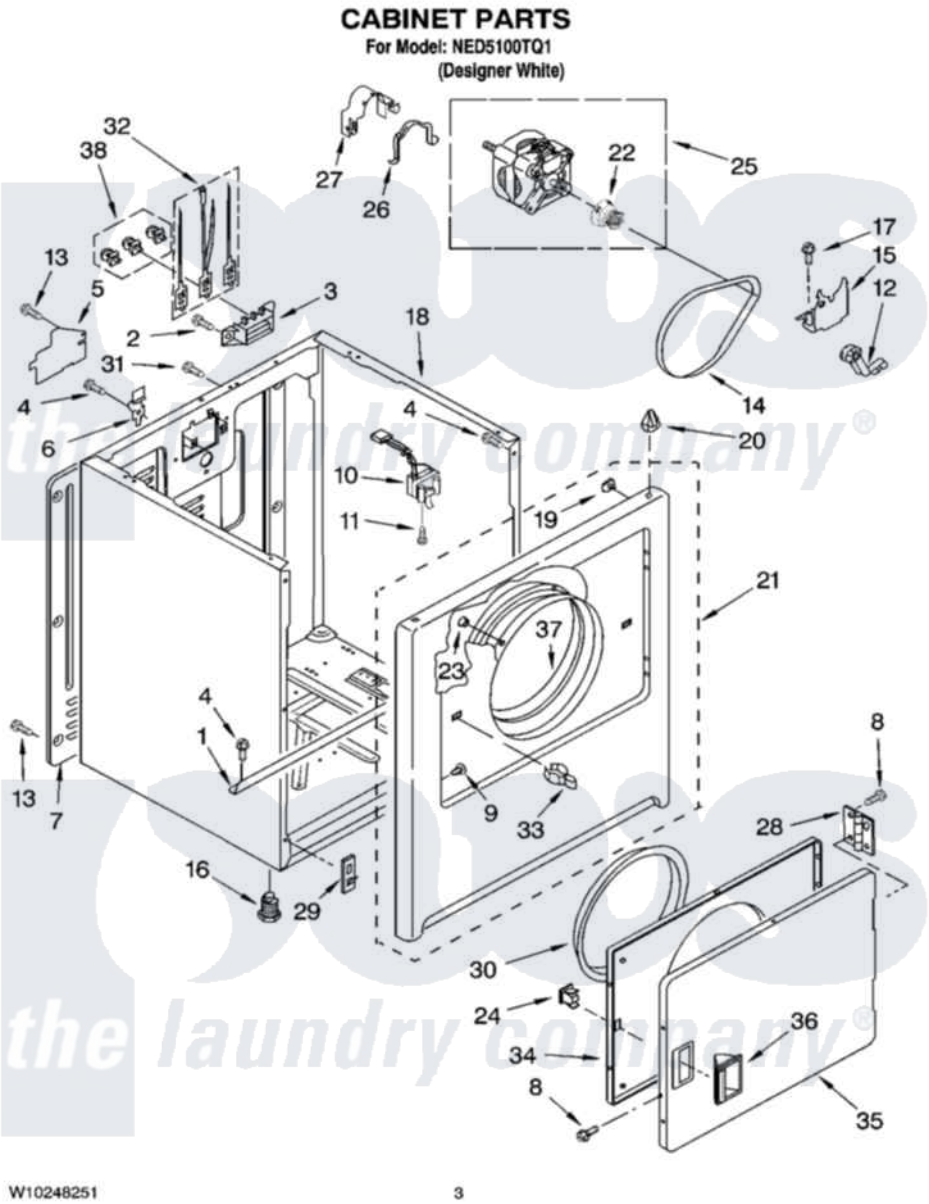

Maytag Residential Maytag NED5100TQ1 Dryer Parts Parts Diagram 02 - CABINET PARTS
Click on the part number to view part

Item	Original Part Number	Replaced By	Status	Part Description
1	8541400			Bracket, Cabinet
2	3393008	308685		Side Trim)
3	3397659			Block, Terminal
4	343641	681414		Screw, 10AB X 1/2
5	3396795			Cover, Terminal Block
6	8066217			Hinge, Top
7	3396807	280040		Panel-Rear
8	342055	488627		Screw
9	3404413			Plug, Hinge Hole
10	3406104	3406105		Door Switch Assembly
11	697773	3395530		Screw
12	691366			Idler And Pulley Assembly
13	693995			Screw, Hex Head
14	W10131364	341241		Belt
15	348780			Base, Motor
16	3392100	49621		Feet-Leveling

17	3400500		Bolt, 3405245 5/16-18 X 3/4
18	8530603	8533643	Cabinet
19	98234		Clip, U-Bend
20	690363	18776	Lock, Front Top
21	3403571	279844	Panel
22	8066184		Pulley, Motor
23	685203	279220	Clip
24	690081	279570	Latch
25	W10194250	279827	Motor-Drve
26	W10121316		Plug, Multivent
27	3404162		Clamp, Motor
28	3405514	W10362431	Hinge And Pin Assembly
29	3394083		Clip, Front Panel
30	3405245		5/16-18 X 3/4
31	697776	4331106	Screw, No.10-32 X 7/16
32	279318		Terminal Tinned And Brass Panel
33	696144	279570	Latch
34	3403371		Door, Inner
35	3403361		Door Front
36	3405184		Handle, Door
37	8066124	279264	Air Channel Box
38	279393		Terminal Block Screw Kit

the laundry company®
the laundry company®