Maytag NTW4800VQ1 04 - BRAKE, CLUTCH, GEARCASE, MOTOR AND PUMP PARTS

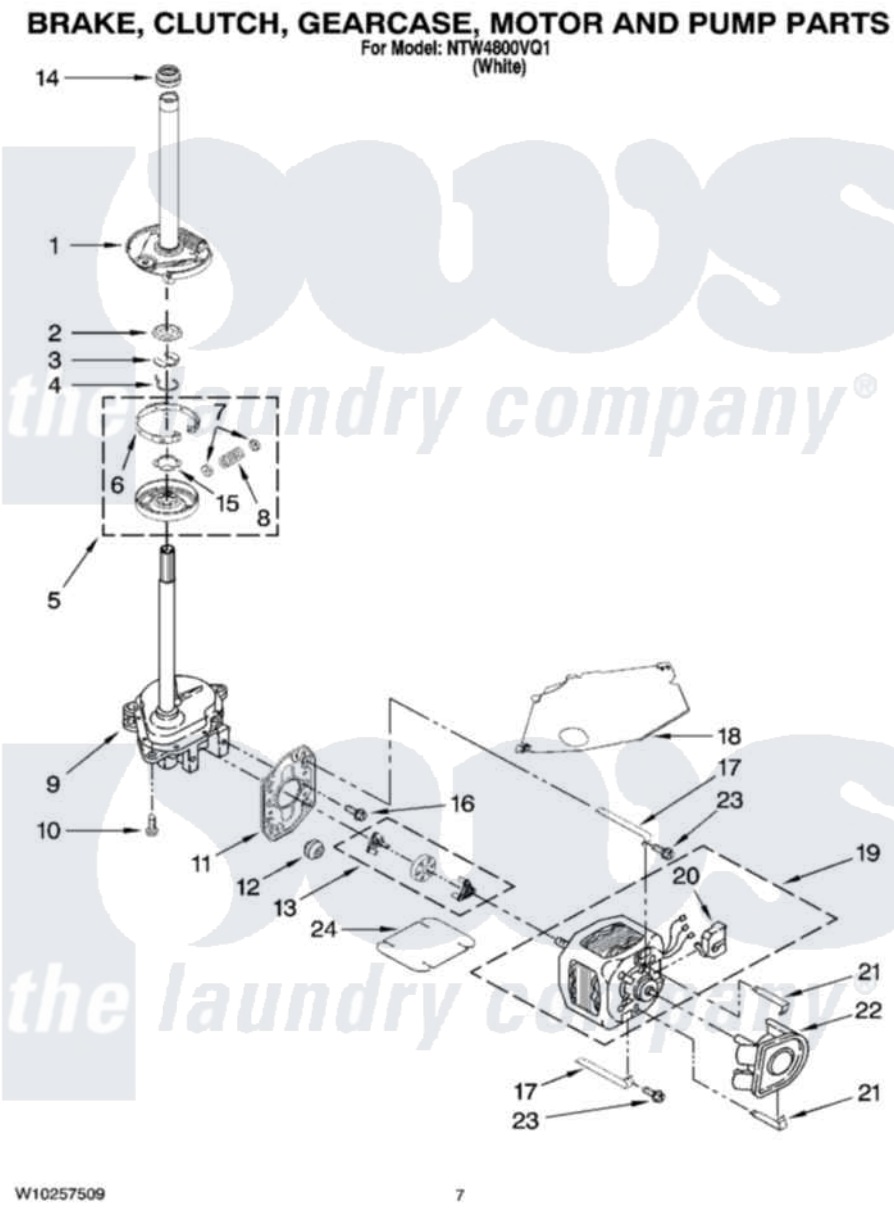

Maytag Residential Maytag NTW4800VQ1 Washer Parts Parts Diagram 04 - BRAKE, CLUTCH, GEARCASE, MOTOR AND PUMP PARTS
Click on the part number to view part

Item	Original Part Number	Replaced By	Status	Part Description
1	388952	285792		Basktdrive
2	63292			Washer, Spin Tube Thrust
3	62697	W10080230		Ring, Spin Tube Support
4	63283	285353		Ring
5	3951311	285785		Clutch
6	3951308	285790		Lining
7	62646			Cap, Clutch Spring
8	3946792			Spring And Damper Assembly
9	3360630	3360629		Gearcase
10	3357334	3400516		Screw Anti-Rattle
11	62611			Plate, Motor Mount To Gearcase
12	62691			Grommet, Motor
13	3364003	285753A		Coupling
14	8577374			Seal, Centerpost

15	3355454		Clip, Main Drive
16	3400516		Screw Anti-Rattle
17	W10086010		Retainer, Motor
18	3362089		Shield, Tub To Motor
19	8528157	661600	Motor, Main Drive
20	3952056		Switch, Main Drive Motor
21	8546127		Retainer, Pump
22	3363394		Pump
23	3387485	273556	Screw, 10-16 X 5/8
24	3946532		Shield, Motor

the laundry company®
the laundry company®
the laundry company®